SAUER DANFOSS

Series 90

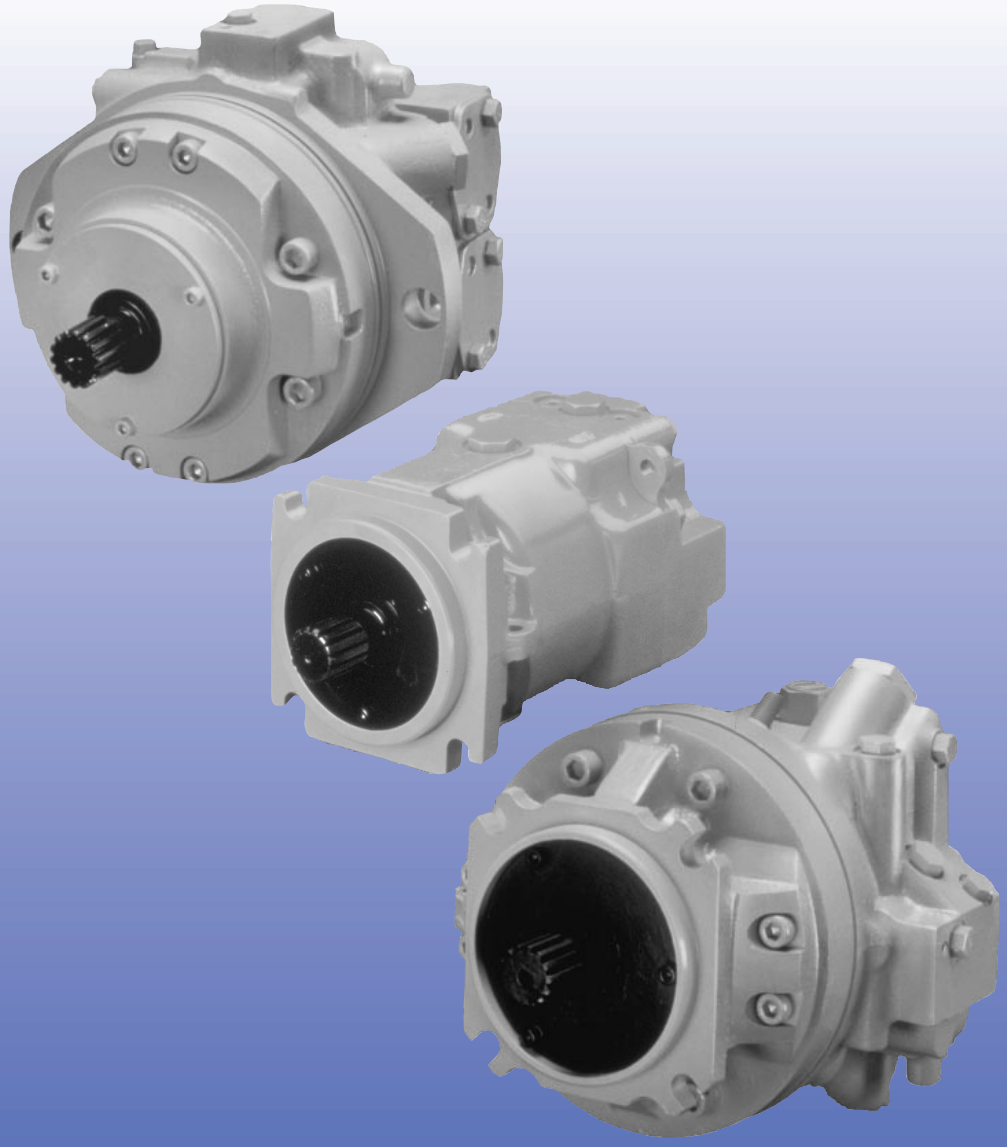

Axial Piston

Motors

Technical Information

Series 90 Family of Pumps and Motors

Series 90 hydrostatic pumps and motors can be applied together or combined with other products in a system to transfer and control hydraulic power. They are intended for closed circuit applications.

Series 90 variable displacement pumps are compact, high power density units. All models utilize the parallel axial piston / slipper concept in conjunction with a tiltable swashplate to vary the pump's displacement. Reversing the angle of the swashplate reverses the flow of oil from the pump and thus reverses the direction of rotation of the motor output.

Series 90 pumps include an integral charge pump to provide system replenishing and cooling oil flow, as well as control fluid flow.

Series 90 pumps also feature a range of auxiliary mounting pads to accept auxiliary hydraulic pumps for use in complementary hydraulic systems. A complete family of control options is available to suit a variety of control systems (mechanical, hydraulic, electric).

Series 90 motors also use the parallel axial piston / slipper design in conjunction with a fixed or tiltable swashplate. They can intake/discharge fluid through either port; they are bidirectional.

They include an optional loop flushing feature that provides for additional cooling and cleaning of fluid in the working loop. In the variable motors, hydraulic or solenoid-operated two-position control valves move the swashplate between minimum and maximum displacement positions.

- **Series 90 – Advanced Technology Today**
- **7 Sizes of Variable Displacement Pumps**
- **5 Sizes of Fixed Displacement Motors**
- **2 Sizes of Variable Displacement Motors**
- **SAE and Cartridge Mount Configurations**
- **Electric and Hydraulic Controls for Variable Motors**
- **Efficient Axial Piston Design**
- **Complete Family of Control Systems**
- **Proven Reliability and Performance**
- **Compact, Lightweight**
- **Worldwide Sales and Service**

Contents

Series 90 Family of Pumps and Motors 2
Sectional Views 4
System Circuit Description 5
Motor Circuit Description 5
Technical Specifications 6
Model Code 8
Hydraulic Equations Helpful for Motor Selection 9
System Parameters 10
  Case Pressure 10
  Speed Limits 10
  Pressure Limits 11
Fluid Specifications 12
  Hydraulic Fluid 12
  Temperature and Viscosity 12
  Fluid And Filtration 13
System Requirements 14
  Brake Warning 14
  Reservoir 14
  Overpressure Protection 14
  Case Drain 14
  Charge Flow Requirements 15
Product Features and Options 16
  Loop Flushing 16
  Displacement Limiters 17
  Speed Sensor 18
  Shaft Options 19
  Two-Position Hydraulic Control · PT 20
  Two-Position Electrohydraulic Displacement Control · NA, NB, NC, ND 20
Loading, Life, and Efficiency 21
  External Shaft Loading and Bearing Life 21
  Efficiency Graphs 22
Series 90 - 42 MF SAE Flange · Dimensions 23
Series 90 - 42 MF Cartridge · Dimensions 25
Series 90 - 55 MF Cartridge · Dimensions 27
Series 90 - 55 MF SAE Flange · Dimensions 29
Series 90 - 55 MV Cartridge · Dimensions 31
Series 90 - 55 MV SAE Flange · Dimensions 33
Series 90 - 75 MF Cartridge · Dimensions 35
Series 90 - 75 MF SAE Flange · Dimensions 37
Series 90 - 75 MV Cartridge · Dimensions 39
Series 90 - 75 MV SAE Flange · Dimensions 41
Series 90 - 100 MF SAE Flange · Dimensions 43
Series 90 - 130 MF SAE Flange · Dimensions 45

Sectional Views

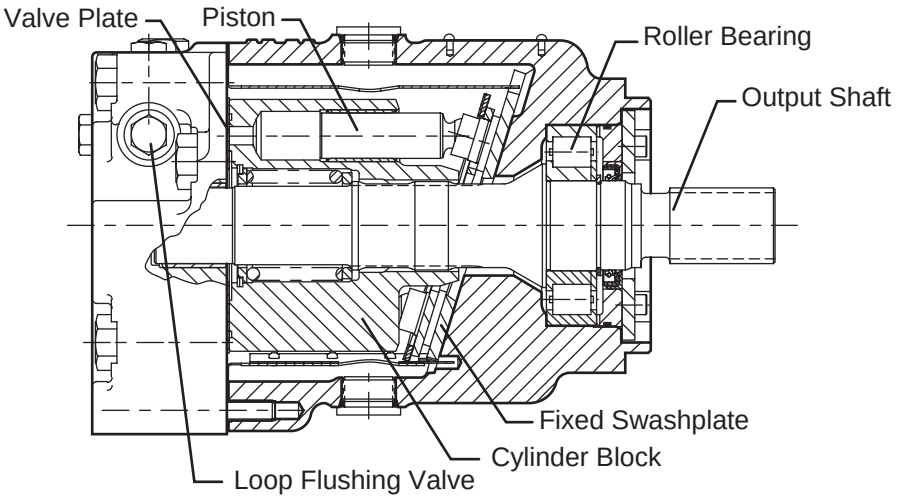

P100 490E

Series 90 Fixed Displacement Motor Cross Section

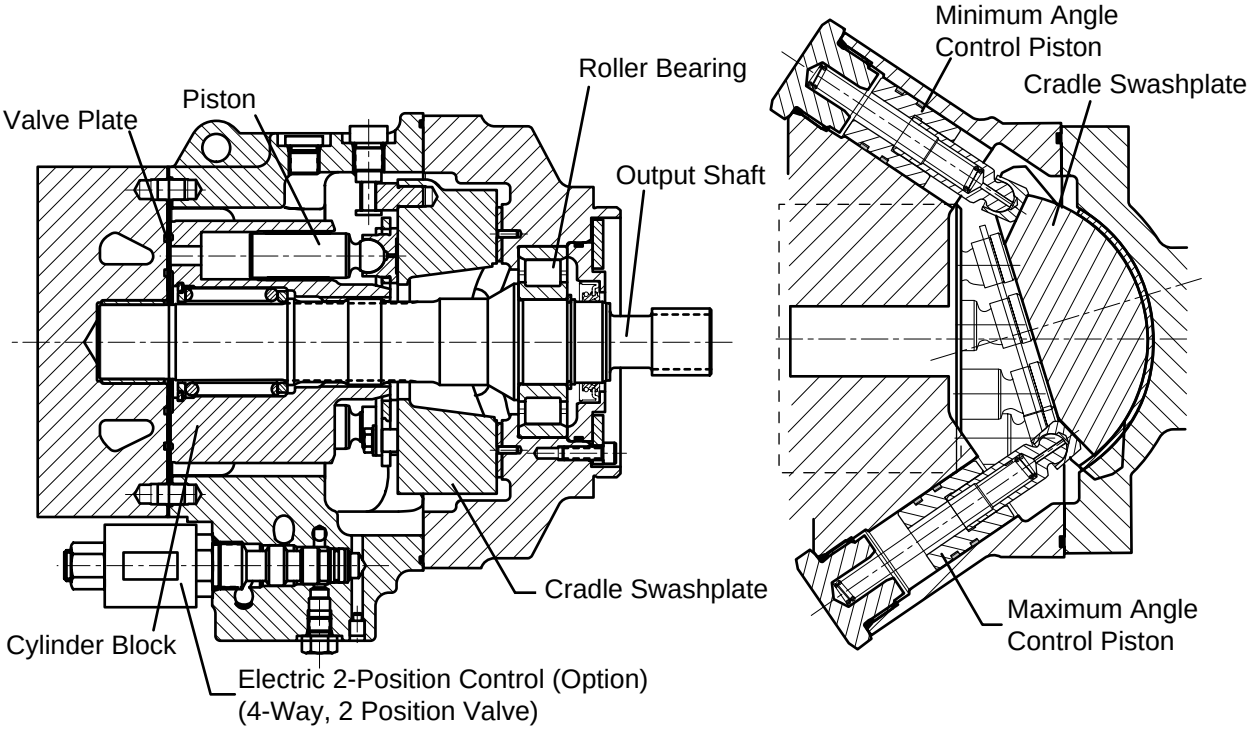

P100 491E

Series 90 Variable Displacement Motor Cross Section
(Partial Section with Cradle Swashplate in Full Displacement Position)

System Circuit Description

A hydrostatic transmission is shown made up of a Series 90 Fixed Motor (right) and a Series 90 Variable Pump. The shaded half of the circuit includes motor features. A suction filtration configuration is shown. Pressure limiters are included on the pump. Note the position of the reservoir and heat exchanger.

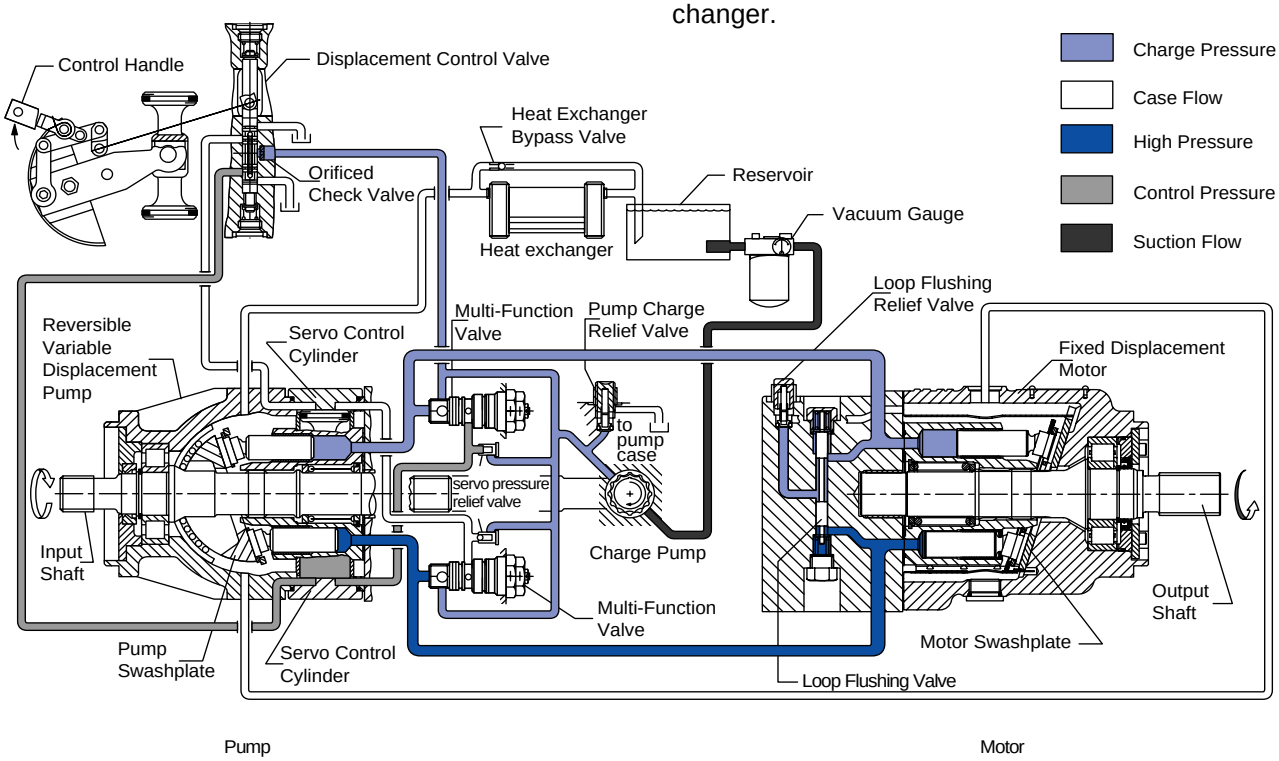

P100 492E

Motor Circuit Description

Circuit schematics are shown for the fixed and variable motors. The system ports "A" and "B" hook up to the high pressure work lines. The motor receives high pressure fluid at its inlet port and discharges lower pressure fluid through the outlet port. Either port can act as inlet or outlet; flow can be bidirectional. System port pressure can be gauged through ports M1 and M2. The motor has two case drains (L1 and L2). The higher case drain should be used to ensure complete filling of the case. The motor may or may not include loop flushing. Loop flushing provides additional cooling and filtration to the working group. The variable motor circuit includes a two-position hydraulic or electrohydraulic control.

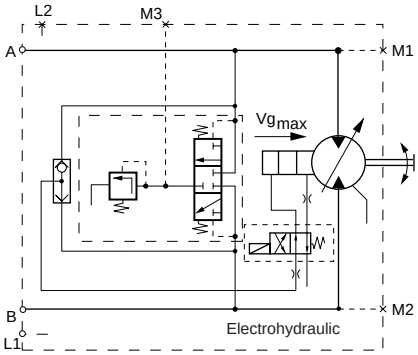

Ports:

A, B	= Main pressure lines
L1, L2	= Case drain lines
M1, M2	= Gauge ports for ports "A" and "B"
M3	= Gauge port for charge pressure
X1	= Motor shift pressure

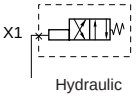

P100 494E

Variable Motor Circuit Schematic

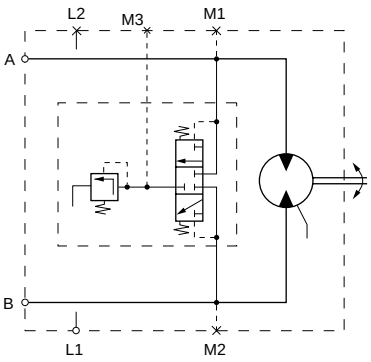

P100 493

Fixed Motor Circuit Schematic

Technical Specifications

Specifications for Series 90 motors are listed on these two pages. For definitions of the various specifications, see the related section in this publication. Not all hardware options are available for all configurations; consult the Series 90 Motor Model Code Supplement or Price Book for more information.

General Specifications

Product Line	Series 90 Motors
Motor Type	In-line, axial piston, closed loop, positive displacement motors.
Direction of Rotation	Bidirectional, see outline drawings for rotation vs flow direction information
Installation Position	Discretionary, but the housing must be filled with hydraulic fluid.
Other System Requirements	Independent braking system, overpressure protection, suitable reservoir, proper filtration

T101 047E

Hardware Specifications

Model		**042 MF**	**055 MF**	**075 MF**	**100 MF**	**130 MF**	**055 MV**	**075 MV**
Swashplate		Fixed	Fixed	Fixed	Fixed	Fixed	Variable	Variable
Displacement cm^3/rev (in^3/rev)	**Maximum**	42 (2.56)	55 (3.35)	75 (4.57)	100 (6.10)	130 (7.93)	55 (3.35)	75 (4.57)
	Minimum	-	-	-	-	-	19 (1.16)	26 (1.59)
Weight kg (lb)	**SAE**	15 (34)†	22 (49)	26 (57)	34 (74)	45 (99)	39 (86)	44 (98)
	Cartridge*	21 (46)	26 (57)	33 (72)	-	-	40 (88)	46 (101)
Moment of Inertia $kg \bullet m^2 \bullet 10^{-3}$ ($lb \bullet ft^2 \bullet 10^{-3}$)		3.9 (92.6)	6.0 (142)	9.6 (228)	15.0 (356)	23.0 (546)	6.0 (142)	9.6 (228)

T101 048E

Hardware Options

Model	**042 MF**	**055 MF**	**075 MF**	**100 MF**	**130 MF**	**055 MV**	**075 MV**
Types of Mounting (SAE flange size per SAE J744)	SAE B†, Cartridge*	SAE C, Cartridge*	SAE C, Cartridge*	SAE C	SAE D	SAE C, Cartridge*	SAE C, Cartridge*
Port Connections	Twin	Twin, Axial	Twin, Axial	Twin, Axial	Twin, Axial	Twin	Twin
Output Shaft Options	Spline	Spline, Tapered, Straight	Spline, Tapered, Straight	Spline, Tapered, Straight	Spline	Spline	Spline
Control Options						Two-Position Electrohydraulic Control, Two-Position Hydraulic Control	
Loop Flushing	●	●	●	●	●	●	●
Charge Relief Valve	●	●	●	●	●	●	●
Displacement Limiters	-	-	-	-	-	●	●
Speed Sensor	-	❍	❍	❍	❍	❍	❍

T101 049E

● standard
❍ optional
- not available / not applicable
* Cartridge design motors are compatible with Fairfield® CT and CW planetary wheel drives. See dimensional drawings for flange dimensions.

System Parameters

Model	042 MF	055 MF	075 MF	100 MF	130 MF	055 MV	075 MV
Speed Limits rev/min							
Rated at max disp	4200	3900	3600	3300	3100	3900	3600
Maximum at max disp	4600	4250	3950	3650	3400	4250	3950
Max. Attainable**	5000	4700	4300	4000	3700	4700	4300
Rated at min disp	-	-	-	-	-	4600	4250
Maximum at min disp	-	-	-	-	-	5100	4700
System Pressure bar (psi)							
Rated	420 (6000)						
Maximum	480 (7000)						
Flow at Rated Speed l/min (gpm)	193 (51)	234(62)	296 (78)	365 (96)	442 (117)	234 (62)	296 (78)
Max Corner Power kW (hp)	155 (208)	187 (251)	237 (318)	292 (392)	354 (475)	187 (251)	237 (318)
Case Pressure bar (psi)							
Continuous	3 (44)						
Maximum (cold start)	5 (72)						

T101 050E

Fluid Specifications

Hydraulic Fluid	Ratings and data are based on operation with premium petroleum-based, anti-wear, hydraulic fluids containing oxidation, rust, and foam inhibitors. See SAS publications BLN-9887 or 697581 for more information. See page 11.
Viscosity mm^2/s or cSt (SUS)	
Rec. Range	12 - 60 (66 - 278)
Minimum (intermitant)	7 (49)
Maximum (cold start)	1600 (7500)
Temperature* °C (°F)	
Minimum (cold start)	-40 (-40)
Continuous	104 (220)
Maximum	115 (240)
Fluid Cleanliness Level	ISO 4406 Class 18/13
Recommended Filtration Efficiency	
Suction Filtration	$\beta_{35-44} = 75$ ($\beta_{10} \geq 2$)
Charge Filtration	$\beta_{15-20} = 75$ ($\beta_{10} \geq 10$)

T101 051E

*Temperature measured at hottest point in the system, usually the motor case drain line.
**Special hardware is required. Contact Sauer-Sundstrand representative.

Model Code

The model code is a modular description of a specific product and its options. To create a model code to include the specific options desired, see the Series 90 Model Code Supplement or the Series 90 Price Book.

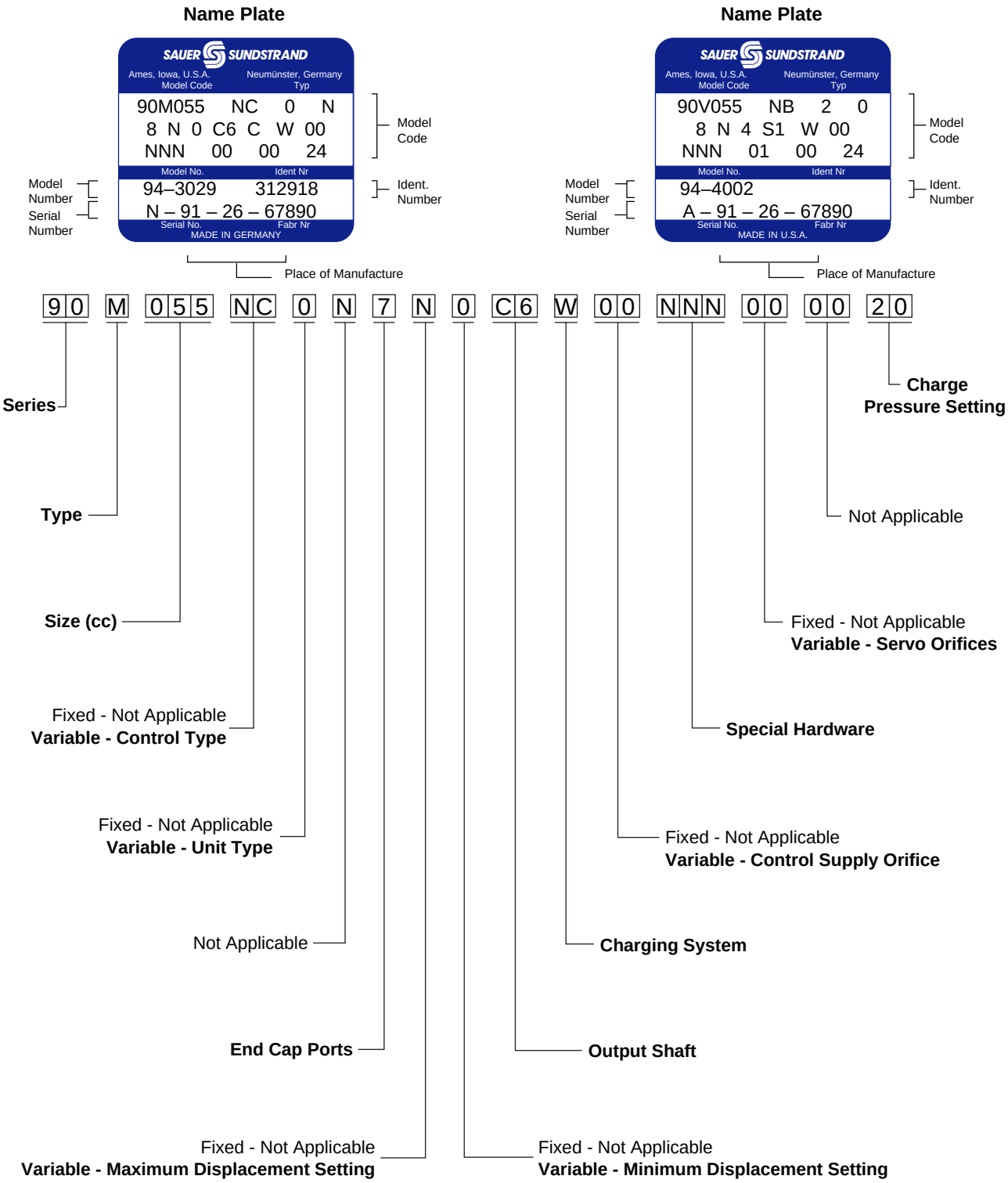

Hydraulic Equations Helpful for Motor Selection

The following equations are helpful when sizing hydraulic motors. Generally, the sizing process is initiated by an evaluation of the machine system to determine the required motor speed and torque to perform the necessary work function. Refer to BLN-9885, "Selection of Driveline Components," for a more complete description of hydrostatic driveline sizing. First, the motor is sized to transmit the maximum required torque. The pump is then selected as a flow source to achieve the maximum motor speed.

Metric System:

Input flow $Q_e = \dfrac{Vg \cdot n}{1000 \cdot \eta_v}$ l/min

Output torque $M_e = \dfrac{Vg \cdot \Delta p \cdot \eta_m}{20 \cdot \pi}$ Nm

Output power $P_e = \dfrac{Vg \cdot n \cdot \Delta p \cdot \eta_m}{600\,000}$ kW

Motor Speed $n = \dfrac{Q_e \cdot 1000 \cdot \eta_v}{Vg}$ min^{-1}(rpm)

Vg	=	Motor displacement per rev.	cm^3
n	=	Hydrostatic motor speed	min^{-1}(rpm)
Δp	=	Differential hydraulic pressure	bar
η_v	=	Motor volumetric efficiency	
η_m	=	Motor mechanical efficiency	

Inch System:

Input flow $Q_e = \dfrac{MD \cdot MS}{231 \cdot EV}$ gpm

Output torque $MT = \dfrac{MD \cdot \Delta p \cdot ET}{2 \cdot \pi}$ lbf•in

Output power $P = \dfrac{MD \cdot MS \cdot \Delta p \cdot ET}{396\,000}$ hp

Motor Speed $MS = \dfrac{Q_e \cdot 231 \cdot EV}{MD}$ min^{-1}(rpm)

MD	=	Motor displacement per rev.	in^3
MS	=	Hydrostatic motor speed	min^{-1}(rpm)
Δp	=	Differential hydraulic pressure	psi
EV	=	Motor volumetric efficiency	
ET	=	Motor mechanical efficiency	

System Parameters

Case Pressure

Under normal operating conditions, case pressure must not exceed the **continuous case pressure** rating. Momentary case pressures exceeding this rating are acceptable under cold start conditions, but still must stay below the **maximum case pressure** rating. Operation with case pressure in excess of these limits may result in external leakage due to damage to seals, gaskets, and/or housings.

Case Pressure	bar	psi
Continuous	3	44
Maximum (cold start)	5	72

T101 052E

Speed Limits

Rated Speed is the speed limit recommended at full power condition, and is the highest value at which normal life can be expected. In a machine propel application, maximum motor speed during unloaded, on-road travelling on level ground should not exceed this limit.

Maximum Speed is the highest operating speed permitted and cannot be exceeded without reducing product life and risking immediate failure and loss of hydrostatic power (which may create a safety hazard). In a machine propel application, maximum motor speed must never exceed this limit during **any** condition (i.e., top speed downhill). **In addition, applications must have a braking system, redundant to the hydrostatic transmission, which will stop and hold the vehicle should hydrostatic control be lost.**

Maximum with Special Hardware requires approval from Sauer-Sundstrand Application Engineering. Special unit hardware and/or special operating conditions may be required.

Consult Bulletin BLN-9884 (“Pressure and Speed Limits”) when determining speed limits for a particular application.

Speed Limits rev/min	042 MF	055 MF	075 MF	100 MF	130 MF	055 MV	075 MV
Rated at max disp	4200	3900	3600	3300	3100	3900	3600
Maximum at max disp	4600	4250	3950	3650	3400	4250	3950
Max w/ Spec Hardware	5000	4700	4300	4000	3700	4700	4300
Rated at min disp	-	-	-	-	-	4600	4250
Maximum at min disp	-	-	-	-	-	5100	4700

T101 053E

Pressure Limits

System pressure is the differential pressure between system ports A and B. It is a dominant operating variable affecting hydraulic unit life. High pressure, which results from high load, reduces expected life in a manner similar to many mechanical assemblies such as engines and gear boxes. There are load-to-life relationships for the rotating group and life predictions can be performed by Sauer-Sundstrand Application Engineering.

Rated system pressure is the highest normally occurring system pressure which should be encountered during normal machine use. Motors should be sized so that the peak machine load can be developed at or below this pressure. In most applications, the pump pressure limiter setting should not exceed this value. Adequate hydrostatic system life will **not** be achieved if the system is runs at or near this pressure continuously.

Maximum system pressure is the highest intermittent pressure allowed. It is determined by the maximum machine load demand, usually during acceleration or load spikes. Maximum pressure is assumed to occur usually less than 2% of the total operating time.

Both the maximum and rated pressure limits must be satisfied to achieve the expected life.

Continuous pressure is the pressure at which the hydrostatic system could operate continuously and still achieve acceptable hydrostatic life. This pressure level varies depending on operating speed, and on the life requirements for a particular application. While most mobile applications require system pressure to vary widely during operation, a "weighted average" pressure can be derived from a machine duty cycle. (A duty cycle is a means of quantifying the pressure and speed demands of a particular system on a percent time basis.) Once a duty cycle has been determined or estimated for a specific application, contact Sauer-Sundstrand Application Engineering for system life ratings for the application.

All pressure limits are differential pressures (referenced to charge pressure) and assume normal charge pressure and no externally applied shaft loads.

Pressure Limits	bar	psi
Maximum	480	7000
Rated	420	6000

T101 054E

Fluid Specifications

Hydraulic Fluid

Ratings and data for Series 90 products are based on operating with premium hydraulic fluids containing oxidation, rust and foam inhibitors. These fluids must possess good thermal and hydrolytic stability to prevent wear, erosion and corrosion of the internal components.

These include premium turbine oils, API CD engine oils per SAE J183, M2C33F or G automatic transmission fluids, Dexron II or IIE (not Dexron III) meeting Allison C3 or Caterpillar TO-2 and certain agricultural tractor fluids. Hydraulic fluids per DIN 51524, part 2 (HLP) and part 3 (HVLP) are suitable. Fire resistant fluids are also suitable at modified operating conditions. For more information see Sauer-Sundstrand publication BLN-9887 or 697581.

Refer to publication ATI-E 9101 for information relating to biodegradable fluids.

It is not permissible to mix hydraulic fluids. Contact your Sauer-Sundstrand representative for more information.

Temperature and Viscosity

Temperature and viscosity requirements must be concurrently satisfied. The data shown at right assumes petroleum/mineral based fluids.

The high temperature limits apply at the hottest point in the transmission, which is normally the motor case drain. The motor should generally be run at or below the **continuous temperature**. The **maximum temperature** is based on material properties and should never be exceeded.

Cold oil will generally not affect durability of the transmission components, but it may affect the ability to flow oil and transmit power; therefore temperatures should remain 16°C (30°F) above the pour point of the hydraulic fluid. The **minimum temperature** relates to the physical properties of component materials.

For maximum unit efficiency and bearing life the fluid viscosity should remain in the **recommended viscosity range**. The **minimum viscosity** should be encountered only during brief occasions of maximum ambient temperature and severe duty cycle operation. The **maximum viscosity** should be encountered only at cold start.

Heat exchangers should be sized to keep the fluid within these limits. Testing to verify that these temperature limits are not exceeded is recommended.

Viscosity	mm^2/s (cSt)	SUS
Recommended Range	12-60	66-278
Minimum (intermittent)	7	49
Maximum (cold start)	1600	7500

T101 055E

Temperature	°C	°F
Minimum	-40	-40
Continuous	104	220
Maximum	115	240

T101 056E

Fluid And Filtration

To prevent premature wear, it is imperative that only clean fluid enter the hydrostatic transmission circuit. A filtration system capable of controlling the fluid cleanliness to ISO 4406 Class 18/13 (SAE J1165) or better, under normal operating conditions, is recommended.

The selection of a filter depends on a number of factors including the contaminant ingression rate, the generation of contaminants in the system, the required fluid cleanliness, and the desired maintenance interval. Filters are selected to meet the above requirements using rating parameters of efficiency and capacity.

Filter efficiency may be measured with a Beta ratio[1] (β_x). For simple closed circuit transmissions with controlled reservoir ingression, a filter with a (β_{10}) ratio of 1.5 to 2 has been found to be satisfactory. For some open circuit systems, and closed circuits with cylinders being supplied from the same reservoir, a considerably higher filter efficiency is recommended. This also applies to systems with gears or clutches using a common reservoir. For these systems, (β_x) ratios of 10 to 20 are typically required.

Since each system is unique, the filtration requirement for that system will be unique and must be determined by test in each case. It is essential that monitoring of prototypes and evaluation of components and performance throughout the test program be the final criteria for judging the adequacy of the filtration system. See publication BLN-9887 or 697581 for more information.

Fluid Cleanliness Level	ISO 4406 Class 18/13
Recommended Filtration Efficiency	
Suction Filtration	$\beta_{35\text{-}44} = 75$ ($\beta_{10} \geq 2$)
Charge Filtration	$\beta_{15\text{-}20} = 75$ ($\beta_{10} \geq 10$)

T101 057E

[1]Filter β_x-ratio is a measure of filter efficiency defined by ISO 4572. It is defined as the ratio of the number of particles greater than a given diameter ("x" in microns) upstream of the filter to the number of these particles downstream of the filter.

System Requirements

Brake Warning

The loss of hydrostatic drive line power in any mode of operation (e.g., forward, reverse, or "neutral" mode) may cause the loss of hydrostatic braking capacity. A braking system, redundant to the hydrostatic transmission and adequate to stop and hold the machine, must therefore be provided in case the condition should develop.

Reservoir

The reservoir should be designed to accommodate maximum volume changes during all system operating modes and to promote de-aeration of the fluid as it passes through the tank.

A suggested minimum total reservoir volume is 5/8 of the maximum charge pump flow per minute with a minimum fluid volume equal to 1/2 of the maximum charge pump flow per minute. This allows 30 seconds fluid dwell for removing entrained air at the maximum return flow. This is usually adequate to allow for a closed reservoir (no breather) in most applications.

The reservoir outlet to the charge pump inlet should be above the bottom of the reservoir to take advantage of gravity separation and prevent large foreign particles from entering the charge inlet line. A 125 µm screen over the outlet port is recommended.

The reservoir inlet (fluid return) should be positioned so that flow to the reservoir is discharged below the normal fluid level, and also directed into the interior of the reservoir for maximum dwell and efficient de-aeration. A baffle (or baffles) between the reservoir inlet and outlet ports will promote de-aeration and reduce surging of the fluid.

Overpressure Protection

Series 90 motors (as well as other system components) have pressure limitations. As Series 90 motors are not equipped with overpressure protection, it is necessary that relief valves or pressure limiters are present elsewhere in the high pressure circuit to protect components from excessive pressures.

Series 90 pumps are designed with a sequenced pressure limiting system and high pressure relief valves. When the preset pressure is reached, the pressure limiter system acts to rapidly de-stroke the pump in order to limit the system pressure. For unusually rapid load application, the high pressure relief valve function is available to also limit the pressure level. Refer to publication BLN-10029 for more information.

NOTE: For systems with relief valves only, high pressure relief valves are intended for transient overpressure protection and are not intended for continuous pressure control. Operation over relief valves for extended periods of time may result in severe heat build up. High flows over relief valves may result in pressure levels exceeding the nominal valve setting and potential damage to system components.

Case Drain

A case drain line must be connected to one of the case outlets (L1 or L2) to return internal motor leakage and loop flushing flow to the system reservoir. The higher of the two case outlets should be used to promote complete filling of the motor case. Since the motor case drain fluid is typically the hottest fluid in the system, it is advantageous to return this flow through the heat exchanger.

Charge Flow Requirements

(A) Charge Flow Requirement - Pump

Refer to the product information for the specific pump being used in the circuit to determine the charge flow requirement, QP.

(B) Charge Flow Requirement - Motor

Determine the motor speeds and the maximum system pressure.

Referring to the accompanying figure, "Charge Flow Requirement - Series 90 Motor," determine the flow factor of the motor, FM

Using the following equation, determine charge flow requirement for the Motor:

$$QM = \frac{FM \times \text{Frame Size}}{75} = \text{Charge Flow Req'd - Motor (gpm)}$$

$$QM = \frac{FM \times \text{Frame Size}}{3.785} = \text{Charge Flow Req'd - Motor (lpm)}$$

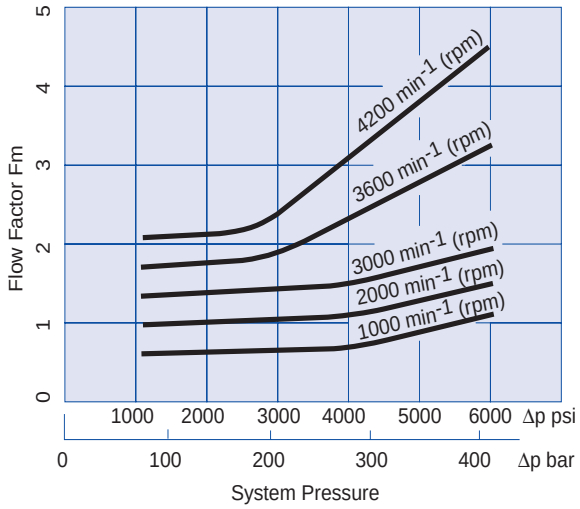

P100 532E

(C) Total Charge Flow Requirements

The total charge flow requirement (QT) is the sum of the flow requirements of each of the components in the system; namely:

$$QT = QP + QM_1 + QM_2 + ... + Q_{Auxiliary} = \text{Total Charge Flow Req'd}$$

Product Features and Options

Loop Flushing

Series 90 motors may incorporate an integral loop flushing valve. Installations that require additional fluid to be removed from the main hydraulic circuit because of fluid cooling requirements, or circuits requiring the removal of excessive contamination, will benefit from loop flushing. A loop flushing valve will remove heat and contaminants from the main loop at a rate faster than otherwise possible.

In series 90 motors, the current loop flushing relief valve design includes an orifice which controls flushing flow under most conditions. A combination of orifice size and charge pressure relief setting will produce a specific flushing flow. A number of orifice sizes are available, resulting in several different flushing flow rates as illustrated in the accompanying graph. Loop flushing flow between 1.5 - 4 gpm (5 and 15 l/min) is generally suitable for most applications, but specific operating conditions may require more flow.

The specific rate of flushing flow selected for an application will depend on the amount of fluid volume in the working loop, the number of motors in the circuit, and possibly other factors. Motor loop flushing flow must be considered in the calculation of total pump charge flow required, to ensure that charge pressure is not reduced excessively in any operating condition. See section titled "Charge Flow Requirements."

WARNING
Excessive motor loop flushing flow may result in the inability to build required system pressure in some conditions. Correct charge pressure must be maintained under all conditions of operation to maintain pump control performance in hydrostatic systems.

NOTE: Consult your Sauer-Sundstrand representative if loop flushing will be required in a circuit which contains a flow divider / combiner. A remote loop flushing valve may be required.

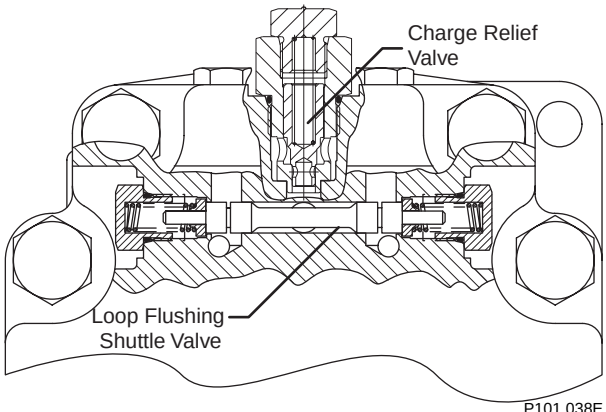

P101 038E

Loop Flushing Valve

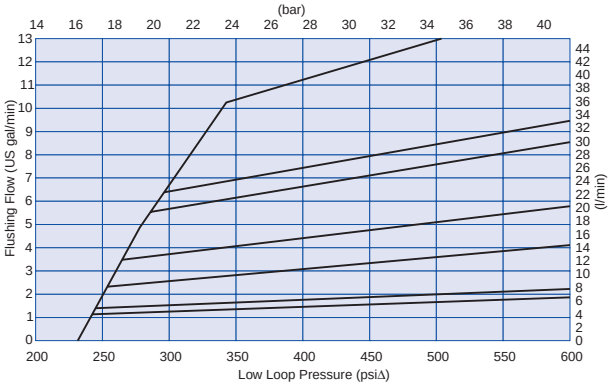

T101 058E

Loop Flushing Flow Rates

175°F (80°C) 10.5 cSt Fluid

Displacement Limiters

Series 90 variable motors include mechanical displacement (stroke) limiters. Both maximum and minimum displacement of the motor can be limited.

Adjustments can be made by loosening the seal lock nut and rotating the limiter screw. The seal lock nut must be re-torqued after any adjustment.

Series 90 variable motors are shipped with the minimum displacement limiter set at the lowest displacement setting and the maximum displacement setting set at full displacement.

WARNING
Care should be taken in adjusting displacement limiters to avoid an undesirable condition of output flow or speed. The sealing lock nut must be re-torqued after every adjustment to prevent an unexpected change in output conditions and to prevent external leakage

Motor Shaft Rotation	Flow Direction	
	Port "A"	Port "B"
Clockwise (CW)	OUT	IN
Counterclockwise (CCW)	IN	OUT

T101 059E

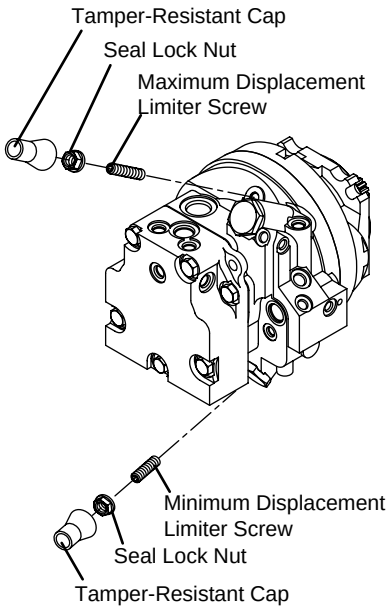

E100 160E

Displacement Limiters

SAE Flange Version shown

(Cartridge Version similar)

Speed Sensor

Series 90 motors are available with an optional speed sensor for direct measurement of motor output speed. This sensor may also be used to sense the direction of motor rotation.

A special magnetic speed ring is pressed onto the outside diameter of the cylinder block and a Hall effect pulse pickup sensor is located in the motor housing. The sensor accepts supply voltage and outputs a digital pulse signal in response to the speed of the ring. The output changes its high/low state as the north and south poles of the permanently magnetized speed ring pass by the face of the sensor. The digital signal is generated at frequencies suitable for microprocessor based controls.

This sensor will operate with a supply voltage of 4.5 to 15 VDC, and requires a current of 12 mA at 5.0 VDC under no load. Maximum operating current is 20 mA at 5VDC. Maximum operating frequency is 15 kHz. Output voltage in “High State” (VOH) is sensor supply voltage minus 0.5 VDC, minimum. Output voltage in “Low State” (VOL) is 0.5 VDC, maximum.

NOTE: It is not acceptable to energize the 4.5-15 VDC ppu with 12VDC battery voltage; it must be energized by a regulated power supply. If it is desirable to energize the sensor with battery voltage, contact Sauer-Sundstrand for an optional speed sensor. *Refer to PIB 9602M.*

The sensor is available with a Packard Weather-Pack 4-pin sealed connector or Turck Eurofast M12x1 4-pin connector.

NOTE: Strain relieve and / or protective cover installation with this device is required by the customer.

NOTE: System FMEA must be done by the customer for each application with the help of Sauer-Sundstrand Application Engineering.

Speed Sensor Specs					
Supply Voltage	4.5-15 VDC				
Required Current	12mA at 5 VDC (no load)				
Max Current	20 mA at 5VDC & 1kH				
Max Frequency	15kHz				
VOH	Supply VDC - 0.5 VDC				
VOL	0.5 VDC Max				
Pulse/Rev	**42cc**	**55cc**	**75cc**	**100cc**	**130cc**
	48	52	58	63	69
Connector (standard)	Packard Weather-Pack 4-pin				

T101 060E

SAUER-SUNDSTRAND
Mating Parts Kit
Part No. K03379 (4 pin)

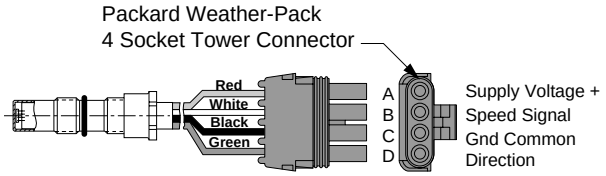

SAUER-SUNDSTRAND
Mating Parts Kit
Part No. K14956 or Ident. No. 500724 (straight)
Part No. K14957 or Ident. No. 500725 (right angle)

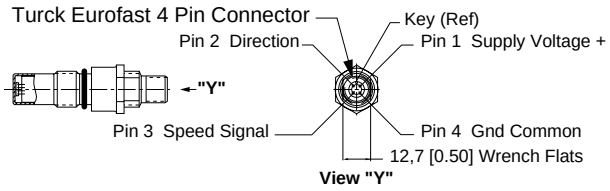

P001 459E

Speed sensor

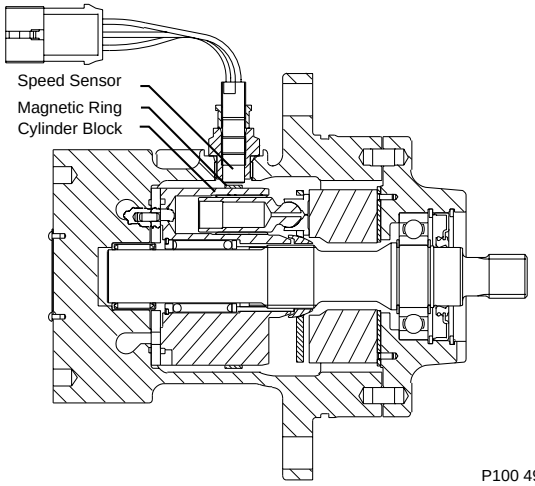

P100 499E

Cross-Section of Speed Sensor on Cylinder Kit

Shaft Options

Series 90 motors are available with a variety of splined, straight keyed, and tapered shaft ends. Nominal shaft sizes and torque ratings are shown in the accompanying table.

Torque ratings assume no external radial loading. **Continuous torque** ratings for splined shafts are based on spline tooth wear, and assume the mating spline has a minimum hardness of R_c 55 and full spline depth with initial lubrication.

Maximum torque ratings are based on fatigue and assume 200 000 load reversals. The permissible continuous torque may approach the maximum rating if the spline is immersed in circulating oil.

Shaft Availability and Torque Ratings

T101 061E

Shaft Description	Option Code	Torque Rating			Frame Size Availability				
			Nm	(in•lbf)	042	055	075	100	130
13 Tooth	C2 (SAE)	Maximum: Continuous:			●	-	-	-	-
15 Tooth, 16/32 Pitch Spline	C3† (SAE)	Maximum: Continuous:	340 192	(3000) (1700)	❍	-	-	-	-
15 Tooth, 16/32 Pitch Spline (long)	C4 (Cartridge)	Maximum: Continuous:	282 124	(2500) (1100)	●	-	-	-	-
21 Tooth, 16/32 Pitch Spline	C6	Maximum: Continuous:	1130 384	(10,000) (3400)	-	●	●	-	-
23 Tooth, 16/32 Pitch Spline	C7	Maximum: Continuous:	1580 509	(14,000) (4500)	-	-	●	●	-
27 Tooth, 16/32 Pitch Spline	C8	Maximum: Continuous:	2938 814	(26,000) (7200)	-	-	-	-	●
13 Tooth, 8/16 Pitch Spline	F1	Maximum: Continuous:	1810 746	(16,000) (6600)	-	-	-	●	●
13 Tooth, 8/16 Pitch Spline (long)	F2	Maximum: Continuous:	1810 746	(16,000) (6600)	-	-	-	●	-
14 Tooth, 12/24 Pitch Spline	S1	Maximum: Continuous:	735 283	(6500) (2500)	-	●	●	❍	-
17 Tooth, 12/24 Pitch Spline	S5	Maximum: Continuous:	1695 599	(15 000) (5300)	-	-	-	●	-
14 Tooth, 12/24 Pitch Spline	S7 (Cartridge)	Maximum: Continuous:	734 282	(6500) (2500)	-	●	●	-	-
34.93 mm (1.375 in) Dia 1 mm/8 mm (1.5 in/ft) Taper	T1	Maximum:	768	(6800)*	-	●	-	-	-
38.1 mm (1.50 in) Dia 1 mm/8 mm (1.5 in/ft) Taper	T2	Maximum:	1130	(10 000)*	-	-	●	●	-
34.9 mm (1.374 in) Dia Straight Keyed	K1	Maximum:	768	(6800)*	-	●	-	-	-
38.07 mm (1.499 in) Dia Straight Keyed	K2	Maximum:	1130	(10 000)*	-	-	●	-	-
44.42 mm (1.749 in) Dia Straight Keyed	K3	Maximum:	1582	(14 000)*	-	-	-	●	-

● available
❍ not recommended in all applications
- not available
* based on external moment load on shaft equal to half the maximum torque value

NOTE: Other splined shaft options may exist. Contact your Sauer-Sundstrand representative for availability.

NOTE: **Recommended mating splines for Series 90 splined output shafts should be in accordance with ANSI B92.1 Class 5.** Sauer-Sundstrand external splines are modified Class 5 Fillet Root Side Fit. The external spline Major Diameter and Circular Tooth Thickness dimensions are reduced in order to assure a clearance fit with the mating spline.

Two-Position Hydraulic Control • PT

Displacement can be changed hydraulically under load from maximum displacement to minimum displacement and vice-versa, by applying a hydraulic signal to port X1. The "slow" orifice option will give an appropriate motor shift rate. More abrupt shifts can be achieved with a "fast" orifice option. The fast orifice option may be required on "dual path" (differential steer) applications to prevent steering errors during shift.

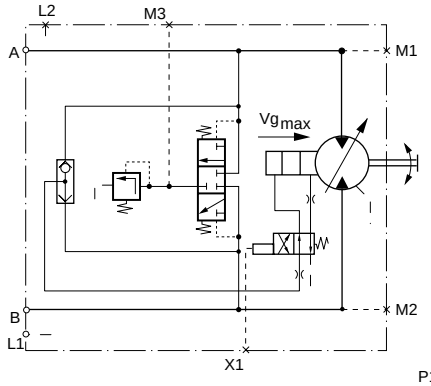

P100 500E

Ports:

A, B	=	Main pressure lines
M3	=	Charge pressure gage port
L1, L2	=	Drain lines
M1, M2	=	Gauge port for port "A" & "B"
X1	=	Control pressure port

Port X1 pressurized = Min. displacement

Port X1 drained = Max. displacement

Min. Required Pressure: 60psi over case pressure

Two-Position Electrohydraulic Displacement Control • NA, NB, NC, ND

Displacement can be changed electrohydraulically under load from maximum displacement to minimum displacement and vice-versa, by using a built-in solenoid valve. The "slow" orifice option will give an appropriate motor shift rate. More abrupt shifts can be achieved with a "fast" orifice option. The fast orifice option may be required on "dual path" (differential steer) applications to prevent steering errors during shift.

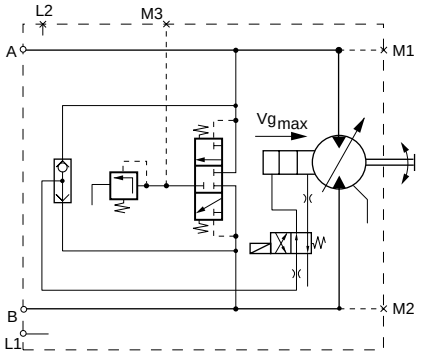

P100 501E

Ports:

A, B	=	Main pressure lines
M3	=	Charge pressure gage port
L1, L2	=	Drain lines
M1, M2	=	Gauge port for port "A" & "B"

Coil energized: Min. Displacement

Coil de-energized: Max. Displacement

NOTE: Either polarity of control voltage is acceptable.

Electrical Connector Options:

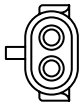

Sauer-Sundstrand
Mating Parts Kit
Part No K03383
IDENT # 712 190
(Female Terminals)

Option NB

12V w/ Packard WeatherPack (Part # 12010973)

2-Way Shroud Connector (Male Terminals)

Sauer-Sundstrand
Mating Parts Kit
Part No K03377
IDENT # 629 725
(Male Terminals)

Option ND

24V w/ Packard WeatherPack (Part # 12015792)

2-Way Tower Connector (Female Terminals)

P100 506

Option NA or NC

12V or 24V w/ MS Connector

(Part # MS3101AI0SL-4P)

Loading, Life, and Efficiency

External Shaft Loading and Bearing Life

Bearing life is a function of several operating conditions including shaft speed, system pressure, swashplate angle, fluid viscosity, fluid cleanliness and external loading. The bearing will not limit motor life to less than 10 000 hours (B-10) at rated speeds for any duty cycle assuming proper fluid conditions are maintained and no external loads are present.

Particle contamination and poor viscosity reduce the life of bearings.

External radial forces on the shaft transfer to the bearing and are additive to the internal bearing loads. The net effect on bearing life is thus a function of the orientation as well as the magnitude of the external shaft load. Maximum allowable external shaft load (R_e) is determined from the maximum allowable bending moment (M_e) in the Allowable Shaft Loading Table, given as a function of orientation per External Shaft Load Orientation figure.

$$R_e = M_e / L$$

Although shaft deflection increases, bearing life can be optimized by orientating the external load so that it is not additive to the internal loading.

To offset the internal bearing loads and optimize bearing life, the external load should be oriented at around 180 if possible.

External overhung adapters (or outboard bearings) are recommended for installations with high radial and/or axial loads. Tapered input shafts or "clamp type" couplings are recommended for installations where radial shaft loads are present. Splined shafts are typically not recommended installations where radial loads are present.

Please contact your Sauer-Sundstrand representative for a bearing life analysis if:

- continuously applied external radial load exceeds 25% of the maximum allowable.
- design life is greater than 10 000 hours.

Provide information on location and direction of the external load.

Shaft Loading Parameters	
R_e	Maximum Radial Side Load
M_e	Maximum External Moment
L	Distance from Mounting Flange to Point of Load
T_{in}	Maximum Shaft Thrust Inward
T_{out}	Maximum Shaft Thrust Outward

T101 062E

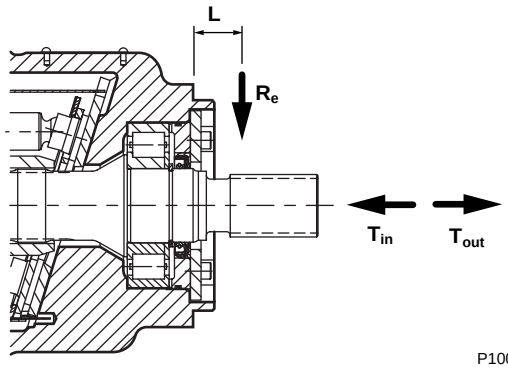

P100 502E

Shaft Loading

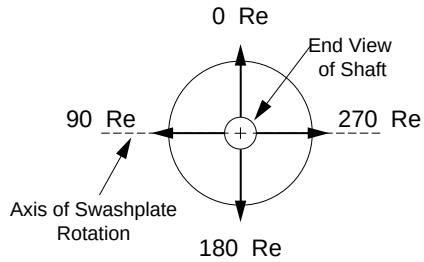

P100 503E

External Shaft Load Orientation

	Allowable Shaft Loading				
Frame Size		**055**	**075**	**100**	**130**
M_e at 0°	Nm (in•lbf)	177 (1560)	351 (3090)	364 (3210)	158 (1400)
M_e at 90°, 180°, 270°	Nm (in•lbf)	535 (4710)	614 (5410)	851 (7500)	282 (2500)
T_{in}	N (lbf)	1779 (400)	2224 (500)	3002 (675)	5207 (1170)
T_{out}	N (lbf)	489 (110)	801 (180)	890 (200)	667 (150)

T101 063E

Efficiency Graphs

The following performance graph provides typical volumetric and overall efficiencies for Series 90 motors. These efficiencies apply for all Series 90 motors.

Motor Performance as a Function of Operating Speed

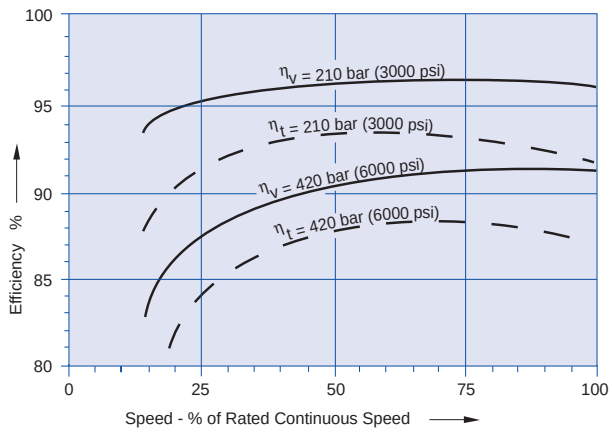

T101 064E

The performance map provides typical motor overall efficiencies at various operating parameters. These efficiencies also apply for all Series 90 motors.

Motor Performance at Select Operating Parameters

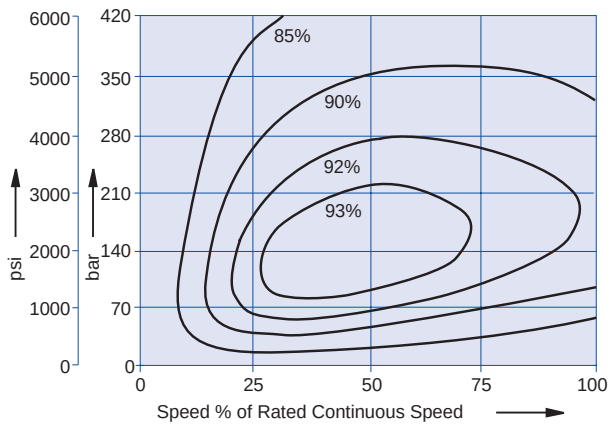

T101 065E

Series 90 - 42 MF SAE Flange • Dimensions

90 M42: Motor

in.
[mm]

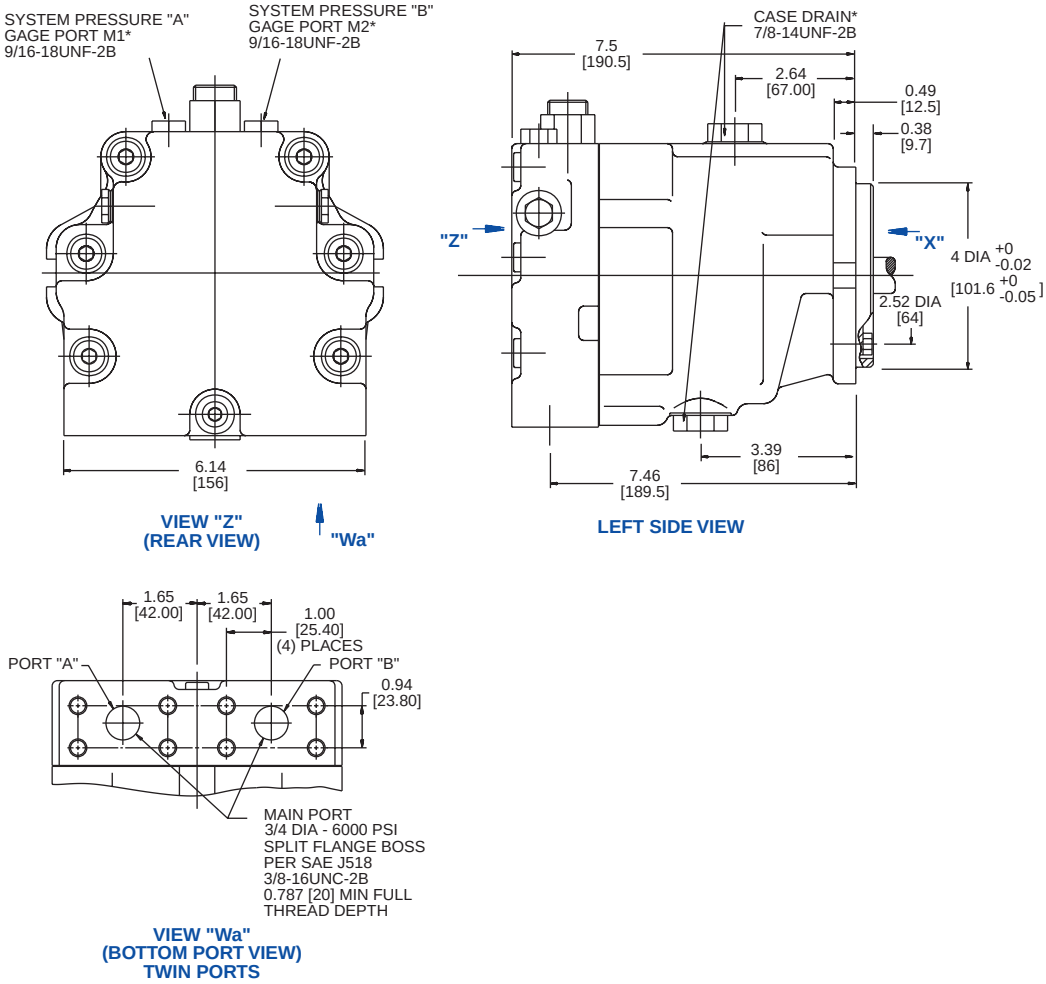

*All SAE straight thread O-Ring ports per SAE J1926 (Fittings per SAE 514).
Shaft rotation is determined by viewing motor from output shaft end.

Contact your SAUER-SUNDSTRAND representative for specific installation drawings.

90 M42: Mounting Flange, Shaft

in.
[mm]

Splined Output Shaft Options							
Output Shaft Option	Shaft Diameter T	Full Spline Length U	Major Dia. V	Length X	Pitch Dia. W	Number of Teeth Y	Pitch Z
C2	0.735 (18.67)	0.748 (19.0)	0.855 (21.72)	1.3 (33)	0.8125 (20.6375)	13	16/32
C3	0.784 (19.9)	0.98 (25)	0.994 (25.27)	1.3 (33)	0.9375 (23.8125)	15	16/32

T101 066E

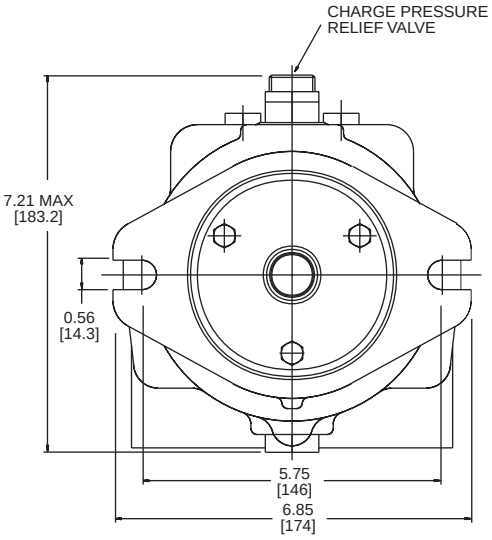

VIEW "X"
(FRONT VIEW)

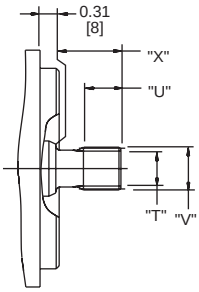

Motor Shaft Rotation	Flow Direction	
	Port "A"	Port "B"
Clockwise (CW)	Out	In
Counterclockwise (CCW)	In	Out

T101 067E

*All SAE straight thread O-Ring ports per SAE J1926 (Fittings per SAE 514).
Shaft rotation is determined by viewing motor from output shaft end.

Contact your SAUER-SUNDSTRAND representative for specific installation drawings.

P100 530E

Series 90 - 42 MF Cartridge • Dimensions

90 K42: Motor

in.
[mm]

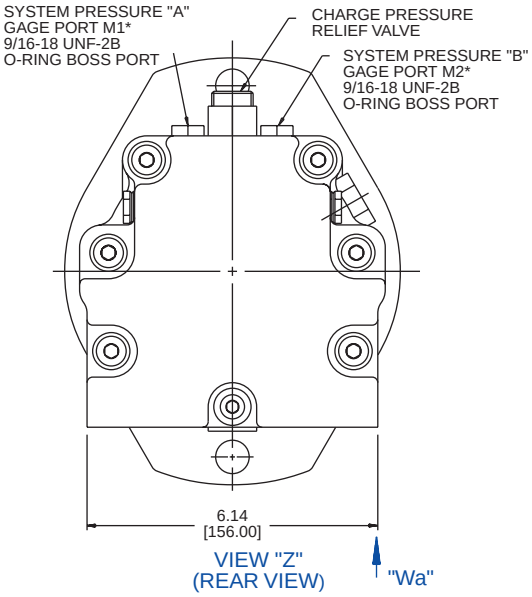

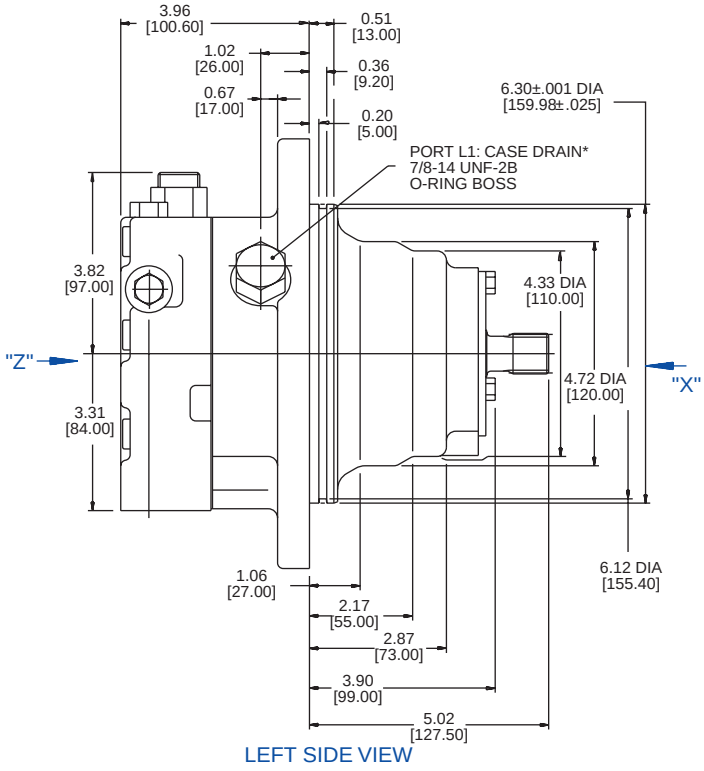

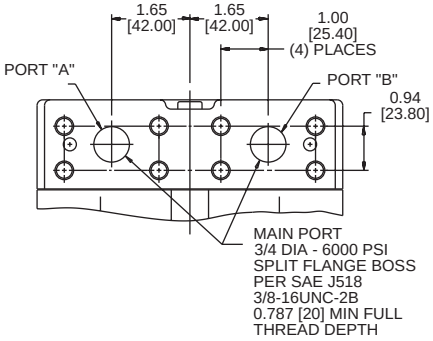

VIEW "Wa"
(BOTTOM PORT VIEW)
TWIN PORTS

*All SAE straight thread O-Ring ports per SAE J1926 (Fittings per SAE 514).
Shaft rotation is determined by viewing motor from output shaft end.
Cartridge design motors are compatible with Fairfield CT and CW planetary wheel drives.
Contact your SAUER-SUNDSTRAND representative for specific installation drawings.

90 K42: Mounting Flange, Shaft

in.
[mm]

Splined Output Shaft Options						
Output Shaft Option	Shaft Diameter T	Full Spline Length U	Major Dia. V	Pitch Dia. W	Number of Teeth Y	Pitch Z
C4	0.84 (21.34)	0.58 (14.75)	1.00 (25.4)	0.9375 (23.813)	15	16/32

T101 068E

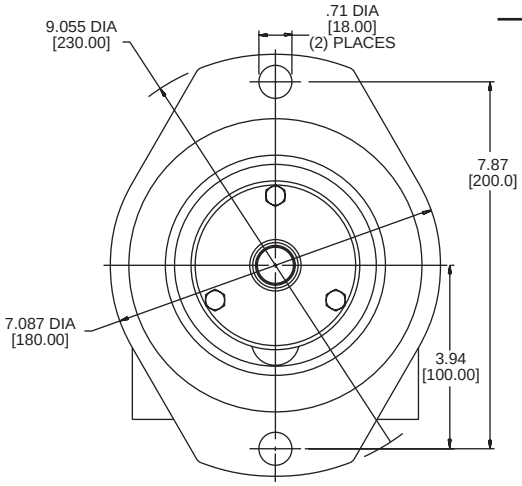

VIEW "X"
(FRONT VIEW)

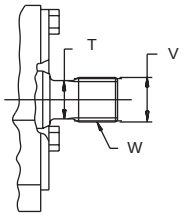

Motor Shaft Rotation	Flow Direction	
	Port "A"	Port "B"
Clockwise (CW)	Out	In
Counterclockwise (CCW)	In	Out

T101 069E

*All SAE straight thread O-Ring ports per SAE J1926 (Fittings per SAE 514).
Shaft rotation is determined by viewing motor from output shaft end.

Contact your SAUER-SUNDSTRAND representative for specific installation drawings.

P100 508E

Series 90 - 55 MF Cartridge • Dimensions

90 K55: Motor, End Caps

in.
[mm]

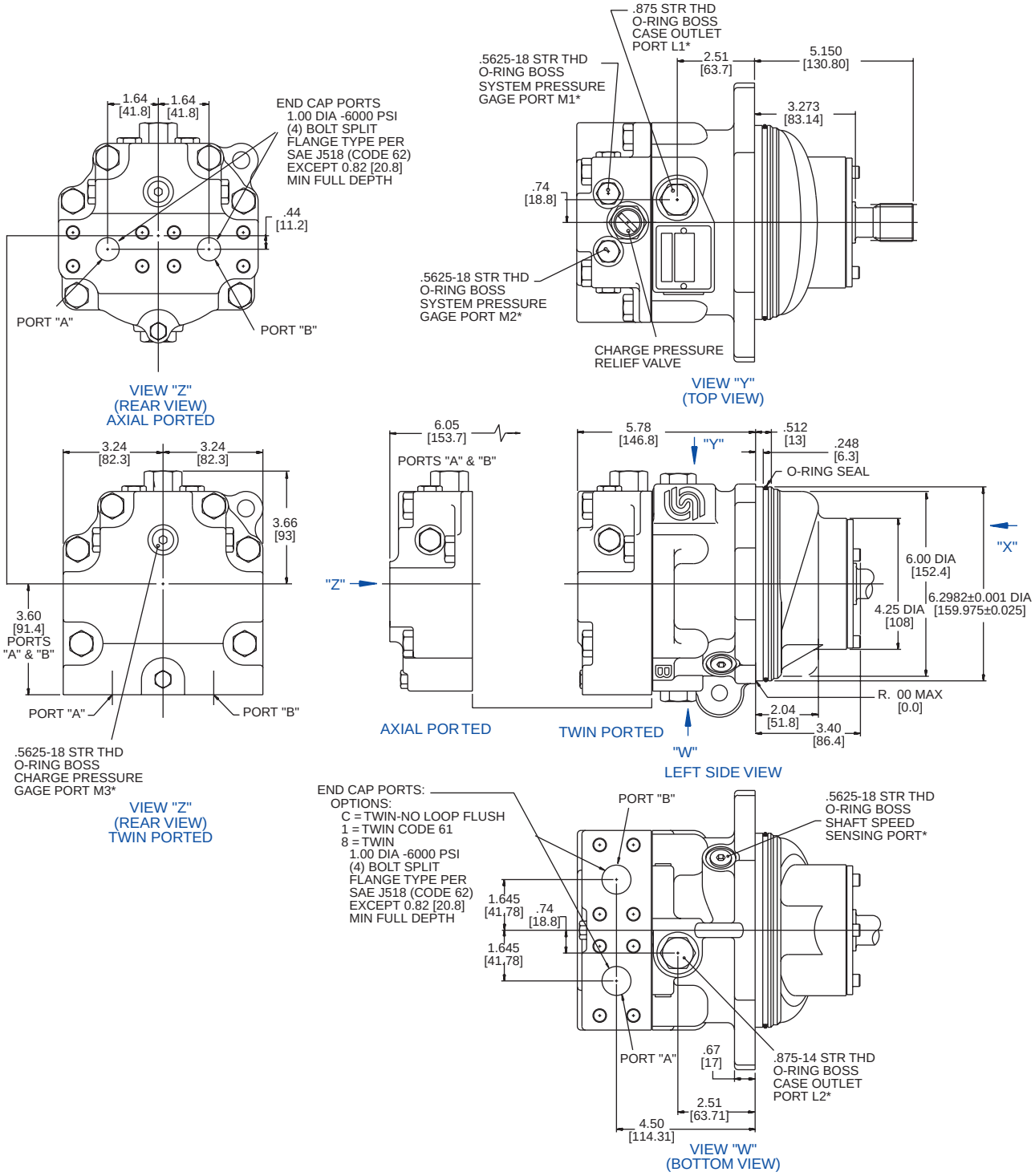

*All SAE straight thread O-Ring ports per SAE J1926 (Fittings per SAE 514).
Shaft rotation is determined by viewing motor from output shaft end.
Cartridge design motors are compatible with Fairfield CT and CW planetary wheel drives.
Contact your SAUER-SUNDSTRAND representative for specific installation drawings.

90 K55: Mounting Flange, Shafts

in.
[mm]

Splined Output Shaft Options

Output Shaft Option	Shaft Diameter T	Full Spline Length U	Major Dia. V	Pitch Dia. W	Number of Teeth Y	Pitch Z
S1	0.98 (24.9)	1.10 (27.9)	1.2258 (31.13)	1.1667 (29.634)	14	12/24
C6	1.14 (29)	1.28 (32.5)	1.3550 (34.42)	1.3125 (33.338)	21	16/32

T101 070E

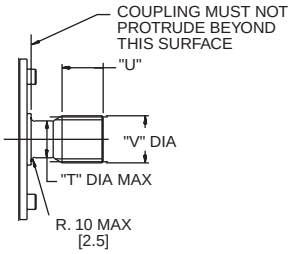

SPLINED SHAFT OPTIONS (SEE TABLE)

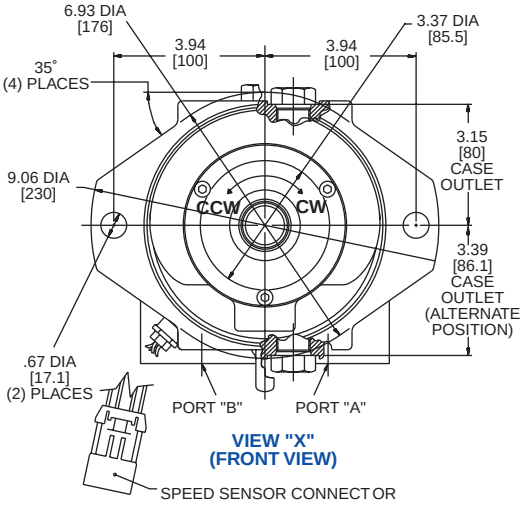

VIEW "X" (FRONT VIEW)

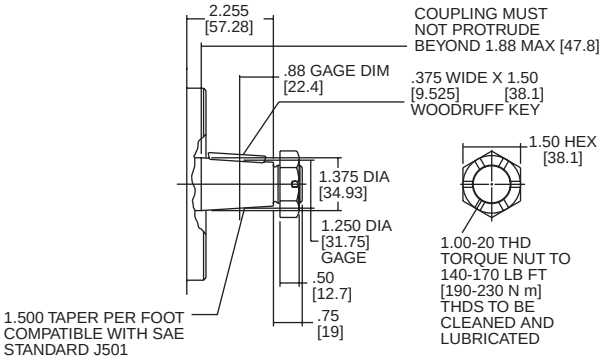

SHAFT OPTION T1

Motor Shaft Rotation	Flow Direction	
	Port "A"	Port "B"
Clockwise (CW)	OUT	IN
Counterclockwise (CCW)	IN	OUT

T101 071E

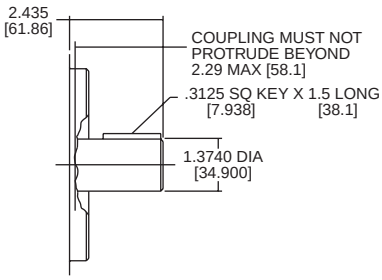

SHAFT OPTION K1

*All SAE straight thread O-Ring ports per SAE J1926 (Fittings per SAE 514).
Shaft rotation is determined by viewing motor from output shaft end.

Contact your SAUER-SUNDSTRAND representative for specific installation drawings.

Series 90 - 55 MF SAE Flange • Dimensions

90M55: Motor, End Caps

in.
[mm]

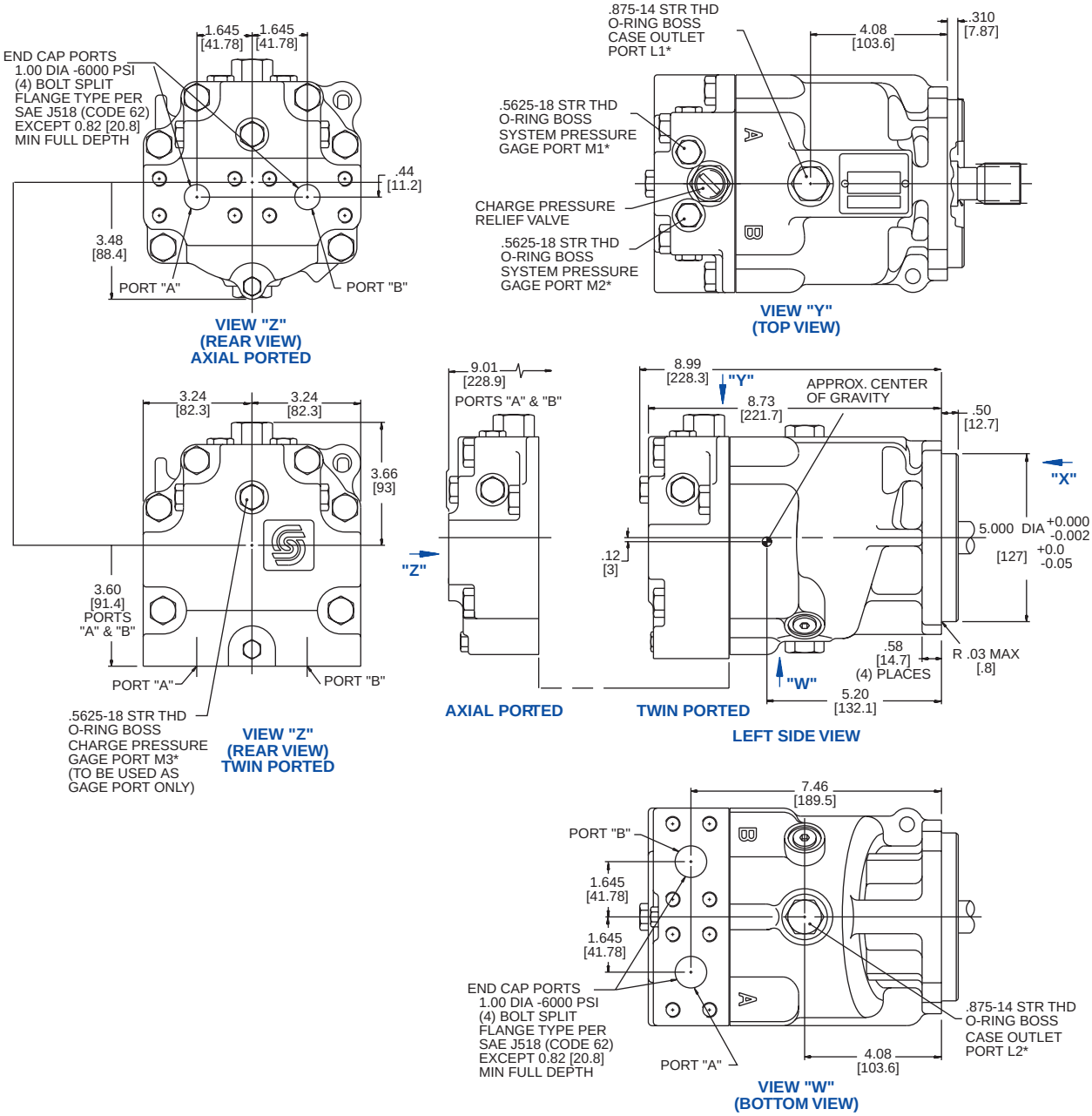

*All SAE straight thread O-Ring ports per SAE J1926 (Fittings per SAE 514).
Shaft rotation is determined by viewing motor from output shaft end.

Contact your SAUER-SUNDSTRAND representative for specific installation drawings.

90M55 SAE Flange: Mounting Flange, Shafts

in.
[mm]

Splined Output Shaft Options						
Output Shaft Option	Shaft Diameter T	Full Spline Length U	Major Dia. V	Pitch Dia. W	Number of Teeth Y	Pitch Z
S1	0.98 (24.9)	1.10 (27.9)	1.2258 (31.13)	1.1667 (29.634)	14	12/24
C6	1.14 (29)	1.28 (32.5)	1.3550 (34.42)	1.3125 (33.338)	21	16/32

T101 072E

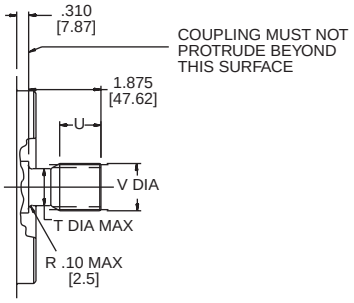

SPLINED SHAFT OPTIONS (SEE TABLE)

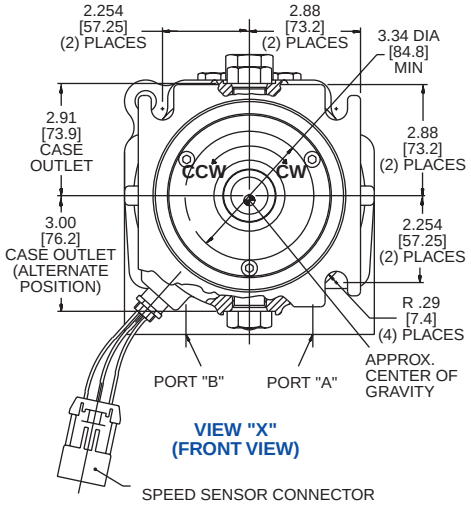

Motor Shaft Rotation	Flow Direction	
	Port "A"	Port "B"
Clockwise (CW)	OUT	IN
Counterclockwise (CCW)	IN	OUT

T101 073E

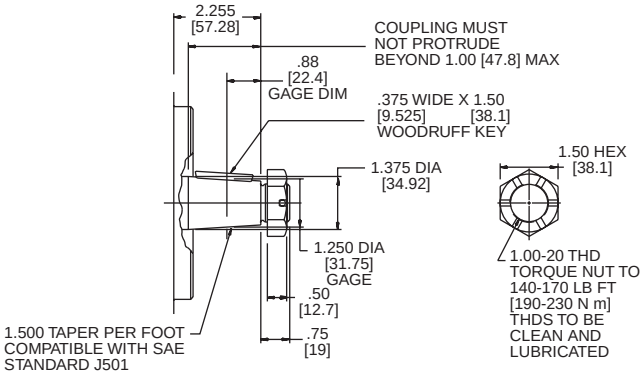

SHAFT OPTION: T1

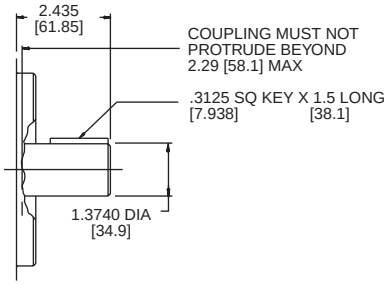

SHAFT OPTION: K1

*All SAE straight thread O-Ring ports per SAE J1926 (Fittings per SAE 514).
Shaft rotation is determined by viewing motor from output shaft end.

Contact your SAUER-SUNDSTRAND representative for specific installation drawings.

P100 512E

Series 90 - 55 MV Cartridge • Dimensions

90M55: Motor

in.
[mm]

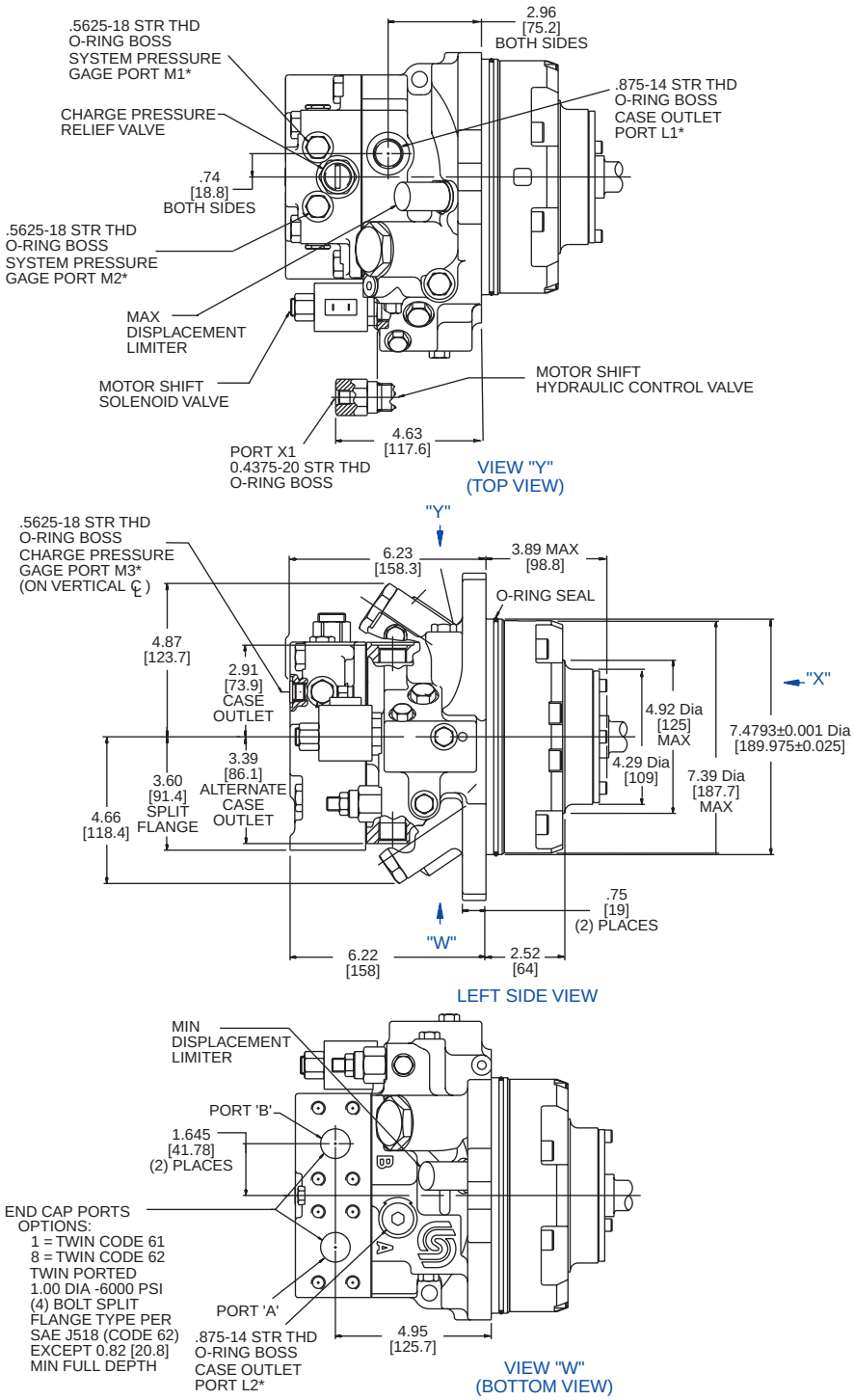

*All SAE straight thread O-Ring ports per SAE J1926 (Fittings per SAE 514).

Shaft rotation is determined by viewing motor from output shaft end.

Cartridge design motors are compatible with Fairfield CT and CW planetary wheel drives. Contact your SAUER-SUNDSTRAND representative for specific installation drawings.

90M55 Cartridge: Mounting Flange, Shafts

in.
[mm]

Splined Output Shaft Options						
Output Shaft Option	Shaft Diameter T	Full Spline Length U	Major Dia. V	Pitch Dia. W	Number of Teeth Y	Pitch Z
S7	0.98 (24.9)	1.00 (25.4)	1.2258 (31.14)	1.1667 (29.634)	14	12/24

T101 074E

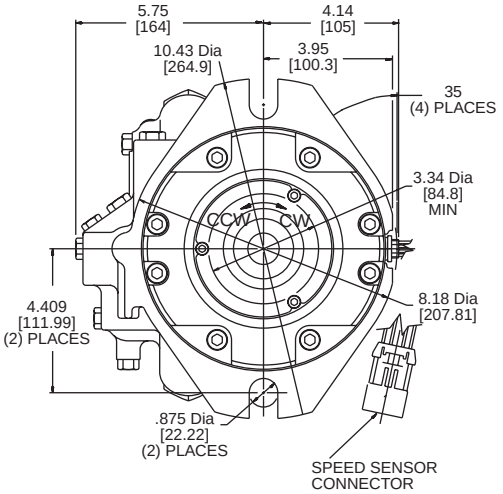

VIEW "X"
(FRONT VIEW)

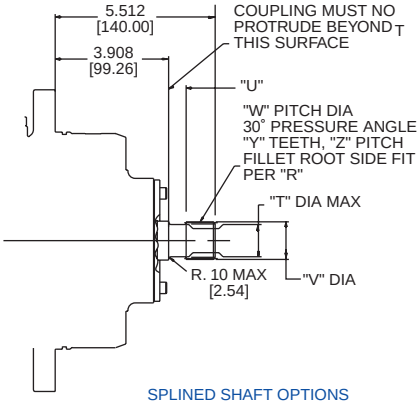

SPLINED SHAFT OPTIONS
(SEE TABLE)

Motor Shaft Rotation	Flow Direction	
	Port "A"	Port "B"
Clockwise (CW)	IN	OUT
Counterclockwise (CCW)	OUT	IN

T101 075E

*All SAE straight thread O-Ring ports per SAE J1926 (Fittings per SAE 514).
Shaft rotation is determined by viewing motor from output shaft end.
Cartridge design motors are compatible with Fairfield CT and CW planetary wheel drives.
Contact your SAUER-SUNDSTRAND representative for specific installation drawings.

P100 514

Series 90 - 55 MV SAE Flange • Dimensions

90V55 SAE Flange: Motor

in.
[mm]

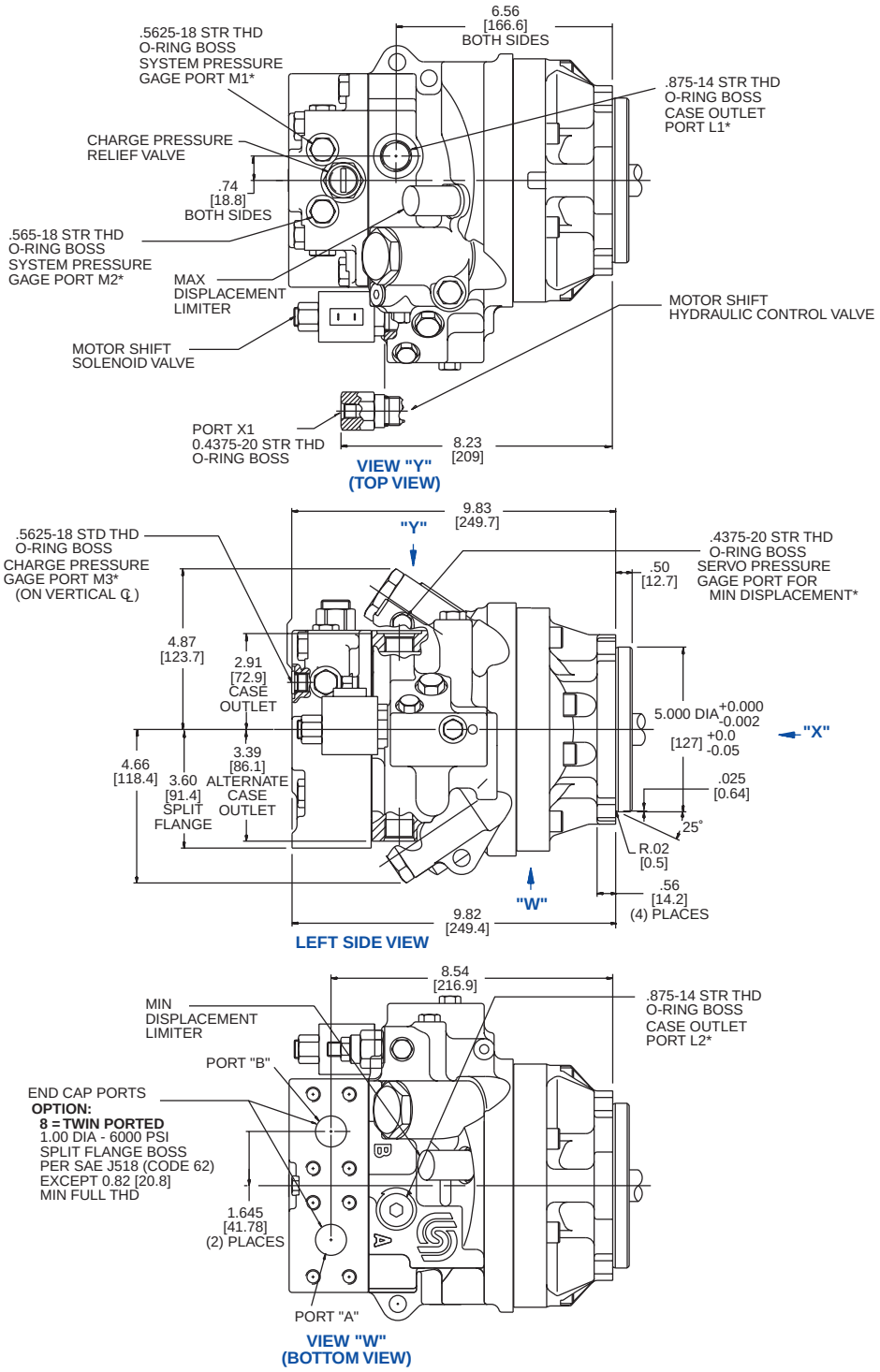

*All SAE straight thread O-Ring ports per SAE J1926 (Fittings per SAE 514).
Shaft rotation is determined by viewing motor from output shaft end.

Contact your SAUER-SUNDSTRAND representative for specific installation drawings.

90V55 SAE Flange: Mounting Flange, Shaft

in.
[mm]

Splined Output Shaft Options						
Output Shaft Option	Shaft Diameter T	Full Spline Length U	Major Dia. V	Pitch Dia. W	Number of Teeth Y	Pitch Z
S1	0.98 (24.9)	1.10 (27.9)	1.2258 (31.13)	1.1667 (29.634)	14	12/24

T101 076E

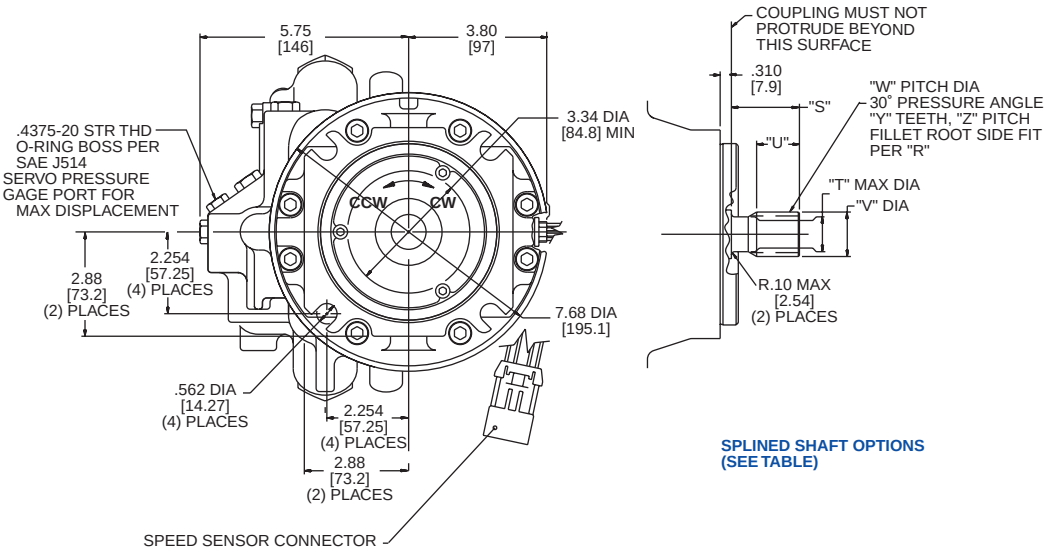

VIEW "X"
(FRONT VIEW)

SPLINED SHAFT OPTIONS
(SEE TABLE)

Motor Shaft Rotation	Flow Direction	
	Port "A"	Port "B"
Clockwise (CW)	IN	OUT
Counterclockwise (CCW)	OUT	IN

T101 077E

*All SAE straight thread O-Ring ports per SAE J1926 (Fittings per SAE 514).
Shaft rotation is determined by viewing motor from output shaft end.

Contact your SAUER-SUNDSTRAND representative for specific installation drawings.

P100 516E

Series 90 - 75 MF Cartridge • Dimensions

90K75 Cartridge: Motor, End Caps

in.
[mm]

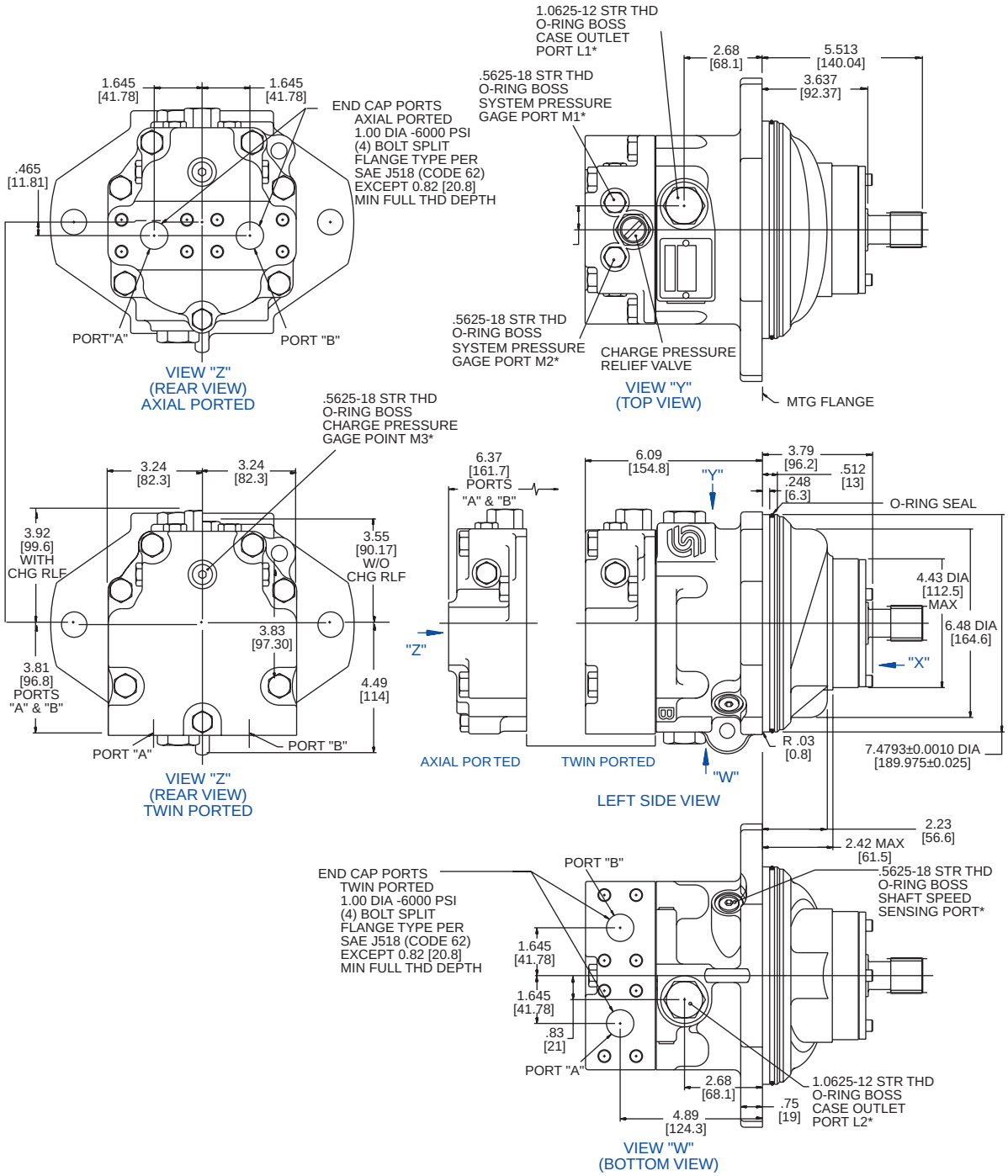

*All SAE straight thread O-Ring ports per SAE J1926 (Fittings per SAE 514).

Shaft rotation is determined by viewing motor from output shaft end.

Cartridge design motors are compatible with Fairfield CT and CW planetary wheel drives. Contact your SAUER-SUNDSTRAND representative for specific installation drawings.

90K75 Cartridge: Mounting Flange, Shafts

in.
[mm]

Splined Output Shaft Options

Output Shaft Option	Shaft Diameter T	Full Spline Length U	Major Dia. V	Pitch Dia. W	Number of Teeth Y	Pitch Z
S1	0.98 (24.9)	1.10 (27.9)	1.2258 (31.13)	1.1667 (29.634)	14	12/24
C6	1.14 (29)	1.28 (32.5)	1.3550 (24.42)	1.3125 (33.338)	21	16/32
C7	1.27 (32.3)	1.37 (34.8)	1.480 (37.59)	1.4375 (36.513)	23	16/32

T101 078E

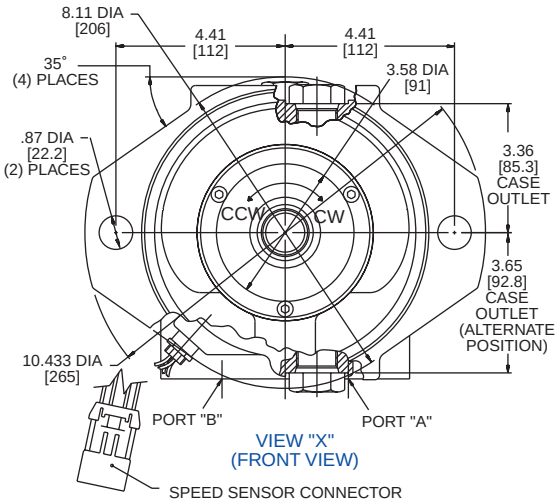

VIEW "X"
(FRONT VIEW)

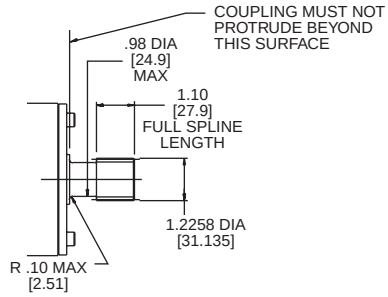

SPLINED SHAFT OPTIONS
(SEE TABLE)

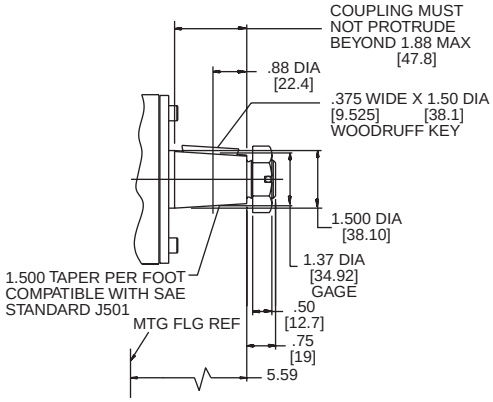

SHAFT OPTION T2

Motor Shaft Rotation	Flow Direction	
	Port "A"	Port "B"
Clockwise (CW)	OUT	IN
Counterclockwise (CCW)	IN	OUT

T101 079E

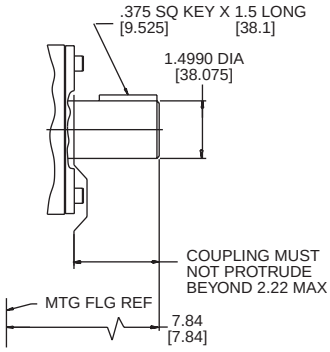

SHAFT OPTIONS K2

*All SAE straight thread O-Ring ports per SAE J1926 (Fittings per SAE 514).
Shaft rotation is determined by viewing motor from output shaft end.

Cartridge design motors are compatible with Fairfield CT and CW planetary wheel drives. Contact your SAUER-SUNDSTRAND representative for specific installation drawings.

P100 518E

Series 90 - 75 MF SAE Flange • Dimensions

90M75: Motors, End Caps

in.
[mm]

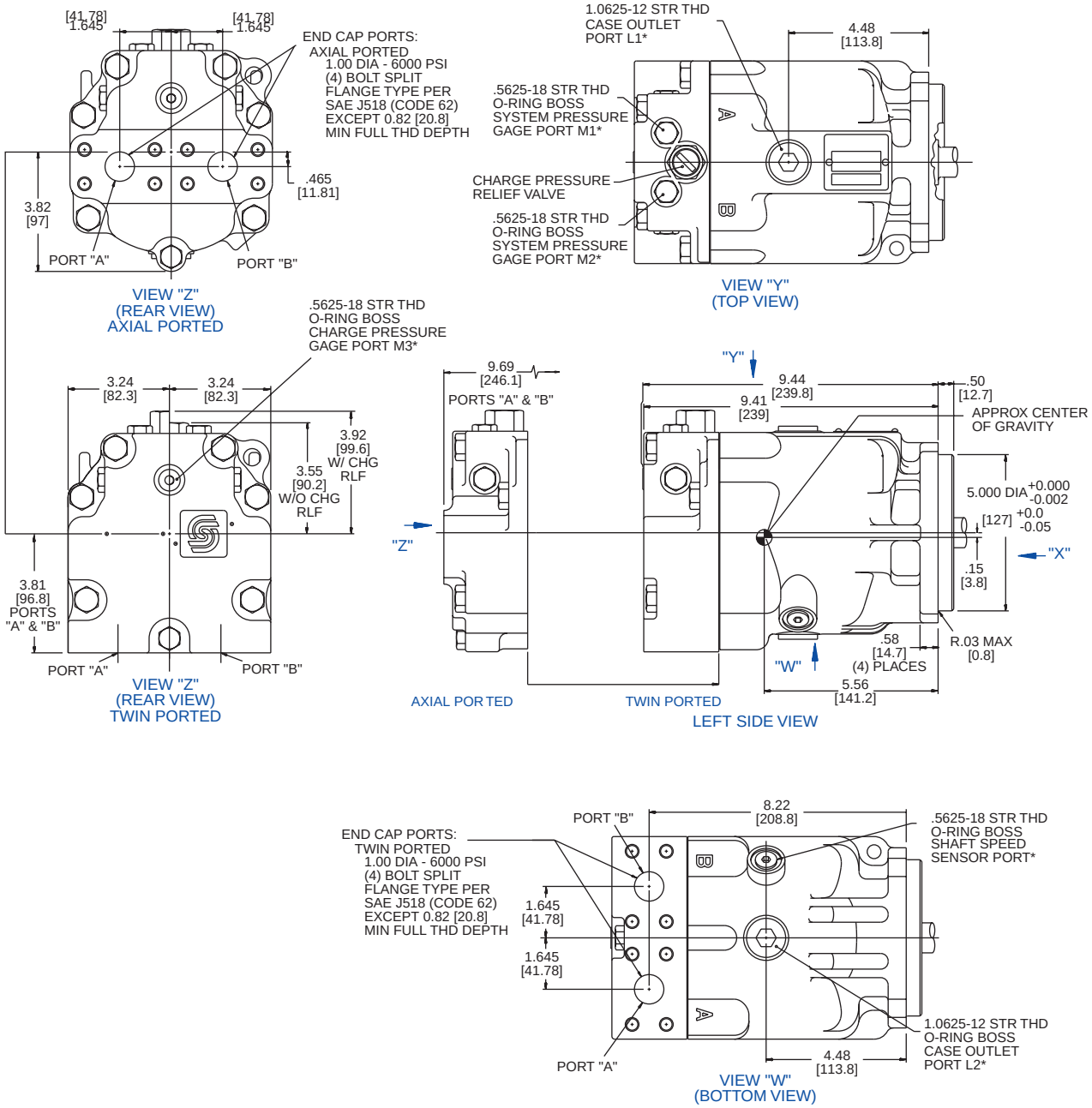

*All SAE straight thread O-Ring ports per SAE J1926 (Fittings per SAE 514).
Shaft rotation is determined by viewing motor from output shaft end.

Contact your SAUER-SUNDSTRAND representative for specific installation drawings.

90M75 SAE Flange: Mounting Flange, Shafts

in.
[mm]

Splined Output Shaft Options

Output Shaft Option	Shaft Diameter T	Full Spline Length U	Major Dia. V	Pitch Dia. W	Number of Teeth Y	Pitch Z
S1	0.98 (24.9)	1.10 (27.9)	1.2258 (31.13)	1.1667 (29.634)	14	12/24
C6	1.14 (29)	1.28 (32.5)	1.3550 (24.42)	1.3125 (33.338)	21	16/32
C7	1.27 (32.3)	1.37 (34.8)	1.480 (37.59)	1.4375 (36.513)	23	16/32

T101 080E

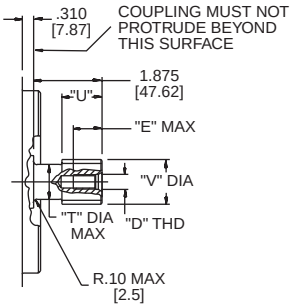

SPLINED SHAFT OPTIONS (SEE TABLE)

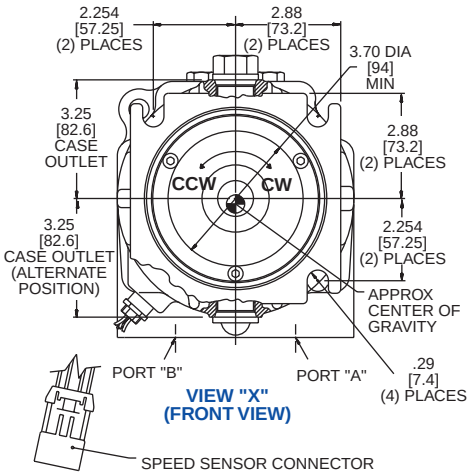

VIEW "X" (FRONT VIEW)

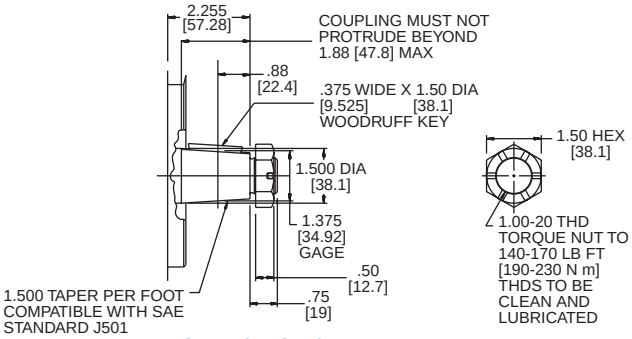

SHAFT OPTION T2

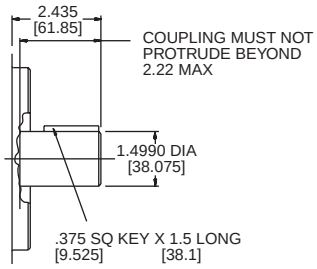

SHAFT OPTION K2

Motor Shaft Rotation	Flow Direction	
	Port "A"	Port "B"
Clockwise (CW)	OUT	IN
Counterclockwise (CCW)	IN	OUT

T101 081E

*All SAE straight thread O-Ring ports per SAE J1926 (Fittings per SAE 514).
Shaft rotation is determined by viewing motor from output shaft end.

Contact your SAUER-SUNDSTRAND representative for specific installation drawings.

P100 520E

Series 90 - 75 MV Cartridge • Dimensions

90C75: Motors

in.
[mm]

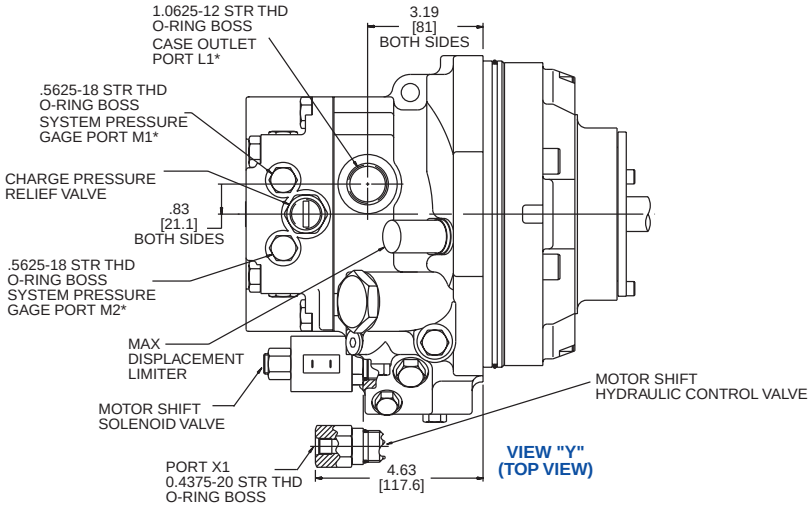

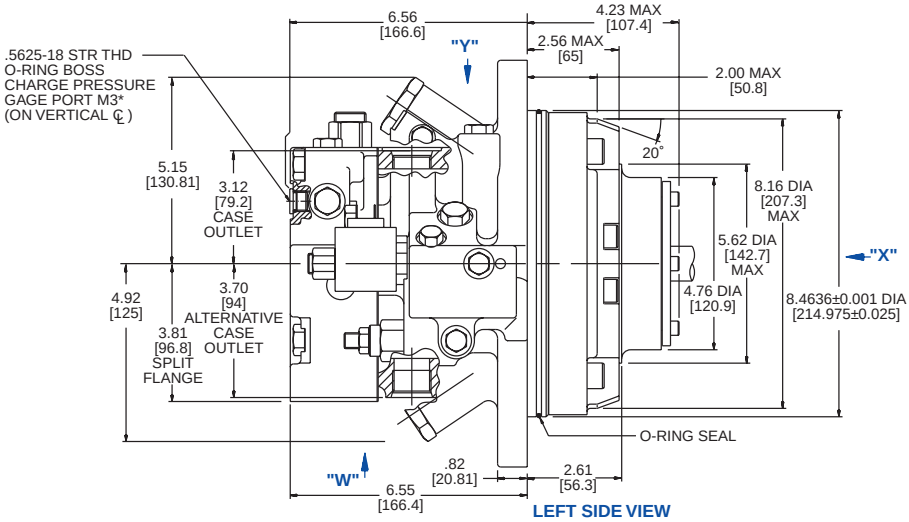

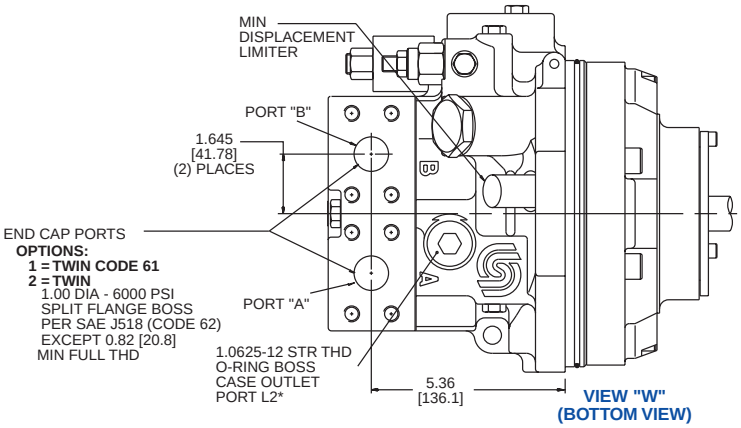

*All SAE straight thread O-Ring ports per SAE J1926 (Fittings per SAE 514).

Shaft rotation is determined by viewing motor from output shaft end.

Cartridge design motors are compatible with Fairfield CT and CW planetary wheel drives.

Contact your SAUER-SUNDSTRAND representative for specific installation drawings.

90C75 Cartridge: Mounting Flange, Shafts

in.
[mm]

Splined Output Shaft Options

Output Shaft Option	Shaft Diameter T	Full Spline Length U	Major Dia. V	Pitch Dia. W	Number of Teeth Y	Pitch Z
S7	0.98 (24.9)	1.00 (24.9)	1.2258 (31.14)	1.1667 (29.634)	14	12/24

T101 082E

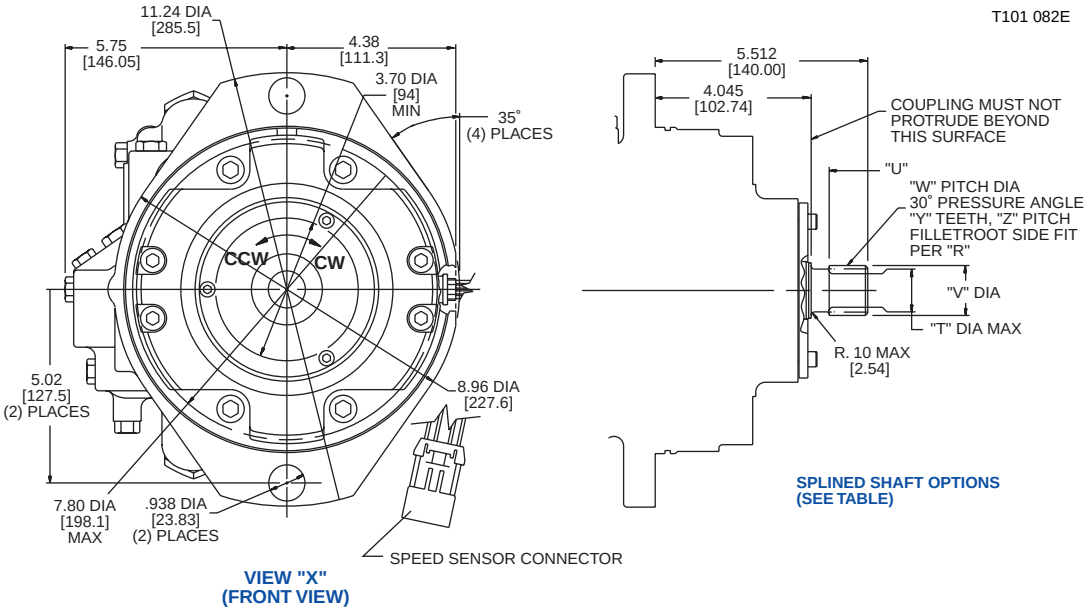

Motor Shaft Rotation	Flow Direction	
	Port "A"	Port "B"
Clockwise (CW)	IN	OUT
Counterclockwise (CCW)	OUT	IN

T101 083E

*All SAE straight thread O-Ring ports per SAE J1926 (Fittings per SAE 514).
Shaft rotation is determined by viewing motor from output shaft end.

Cartridge design motors are compatible with Fairfield CT and CW planetary wheel drives. Contact your SAUER-SUNDSTRAND representative for specific installation drawings.

P100 522E

Series 90 - 75 MV SAE Flange • Dimensions

90V75: Motors

in.
[mm]

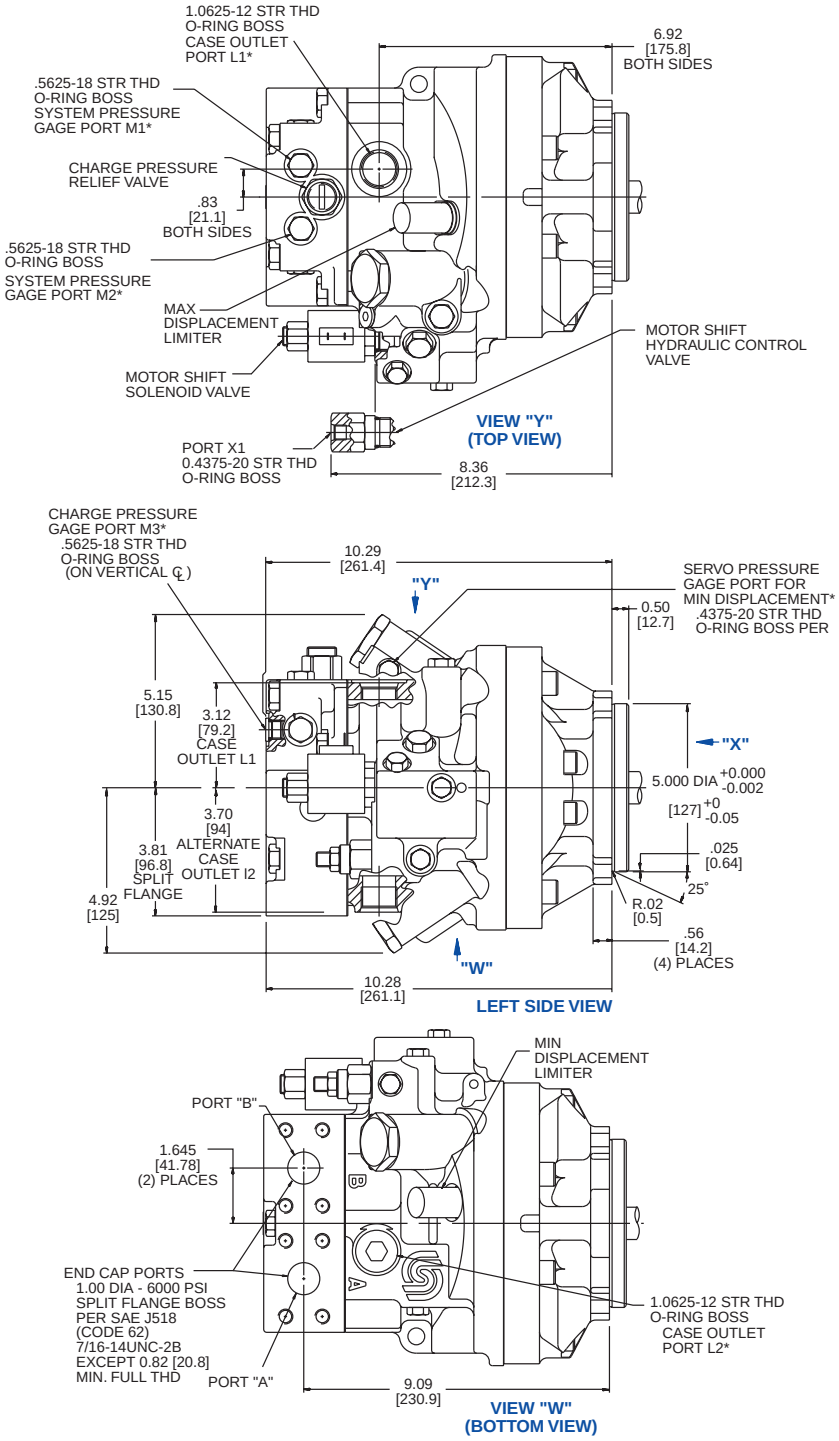

*All SAE straight thread O-Ring ports per SAE J1926 (Fittings per SAE 514).
Shaft rotation is determined by viewing motor from output shaft end.

Contact your SAUER-SUNDSTRAND representative for specific installation drawings.

90V75 SAE Flange: Mounting Flange, Shafts

in.
[mm]

Splined Output Shaft Options						
Output Shaft Option	Shaft Diameter T	Full Spline Length U	Major Dia. V	Pitch Dia. W	Number of Teeth Y	Pitch Z
S1	0.98 (24.9)	1.10 (27.9)	1.2258 (31.13)	1.1667 (29.634)	14	12/24

T101 084E

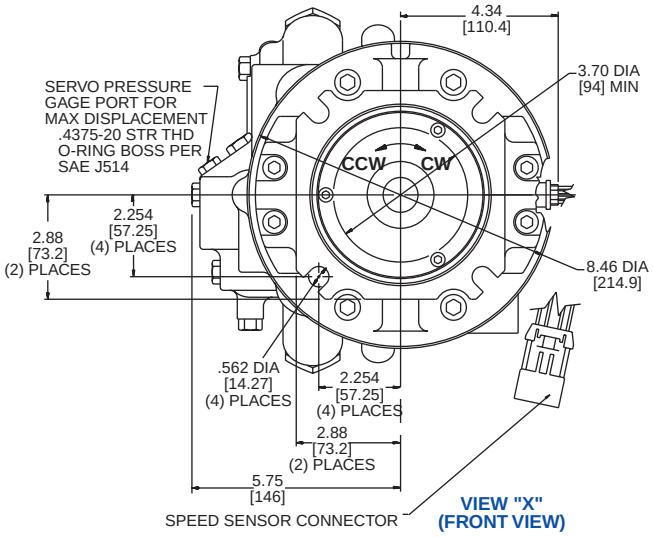

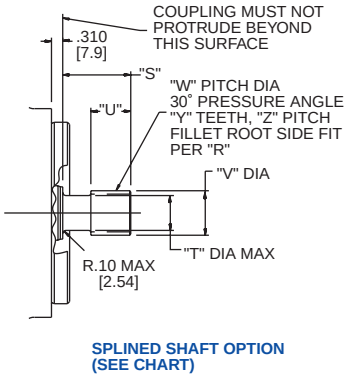

Motor Shaft Rotation	Flow Direction	
	Port "A"	Port "B"
Clockwise (CW)	IN	OUT
Counterclockwise (CCW)	OUT	IN

T101 085E

*All SAE straight thread O-Ring ports per SAE J1926 (Fittings per SAE 514).
Shaft rotation is determined by viewing motor from output shaft end.

Contact your SAUER-SUNDSTRAND representative for specific installation drawings.

P100 524E

Series 90 - 100 MF SAE Flange • Dimensions

90M100 SAE Flange: Motor, End Caps

in.
[mm]

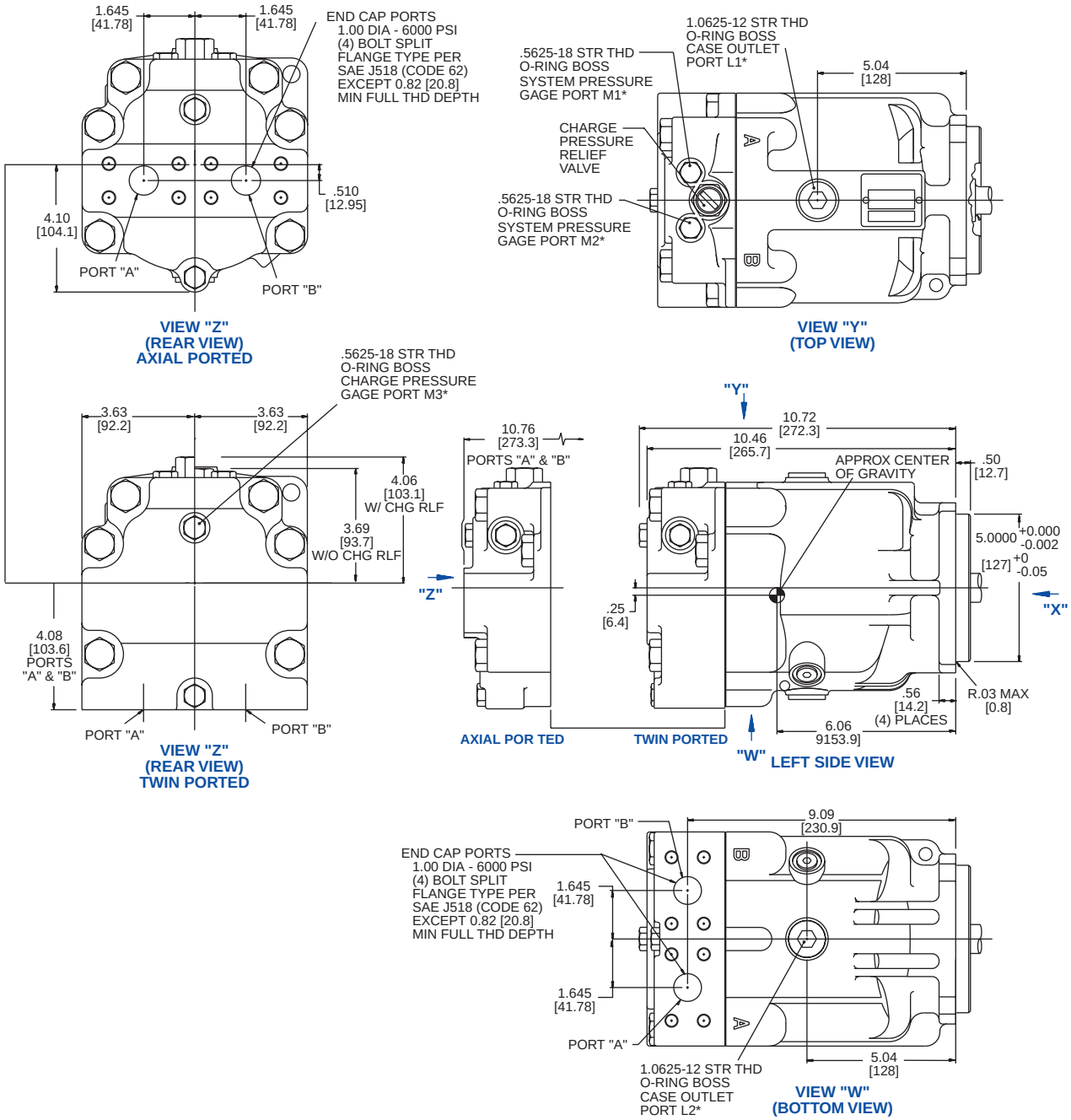

*All SAE straight thread O-Ring ports per SAE J1926 (Fittings per SAE 514).
Shaft rotation is determined by viewing motor from output shaft end.

Contact your SAUER-SUNDSTRAND representative for specific installation drawings.

90M100 SAE Flange: Mounting Flange, Shafts

in.
[mm]

Splined Output Shaft Options							
Output Shaft Option	Shaft Diameter T	Full Spline Length U	Major Dia. V	Pitch Dia. W	Number of Teeth Y	Pitch Z	Length S
S1	0.98 (24.9)	1.10 (27.9)	1.2258 (31.13)	1.1667 (29.634)	14	12/24	
C7	1.27 (32.3)	1.37 (34.8)	1.480 (37.59)	1.4375 (36.513)	23	16/32	1.875 (47.6)
F1	1.36 (34.5)	1.53 (38.9)	1.730 (43.94)	1.6250 (41.275)	13	8/16	2.625 (66.7)
F2	1.36 (34.5)	1.53 (38.9)	1.730 (43.94)	1.6250 (41.275)	13	8/16	3.32 (84.3)

T101 087E

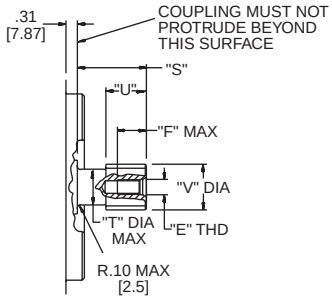

SPLINED SHAFT OPTIONS (SEE CHART)

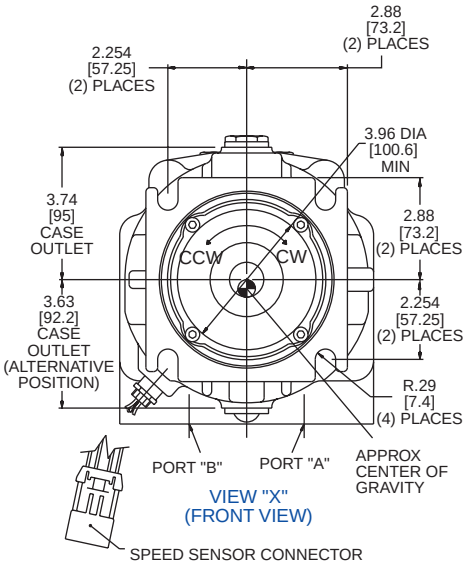

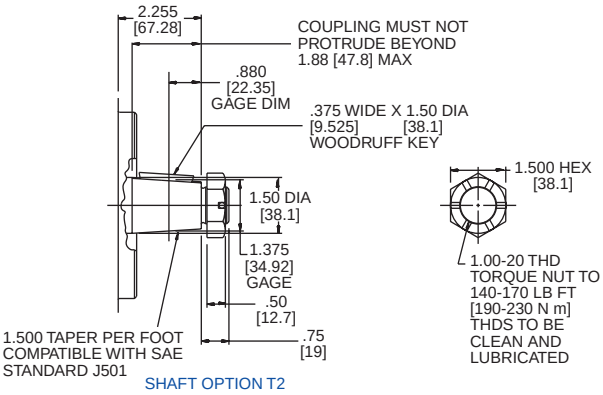

SHAFT OPTION T2

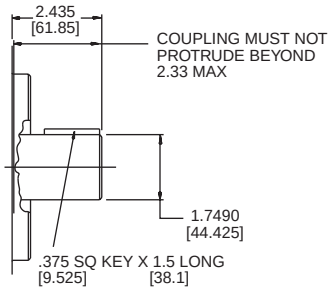

SHAFT OPTION K3

Motor Shaft Rotation	Flow Direction	
	Port "A"	Port "B"
Clockwise (CW)	OUT	IN
Counterclockwise (CCW)	IN	OUT

T101 088E

*All SAE straight thread O-Ring ports per SAE J1926 (Fittings per SAE 514).
Shaft rotation is determined by viewing motor from output shaft end.

Contact your SAUER-SUNDSTRAND representative for specific installation drawings.

P100 526E

Series 90 - 130 MF SAE Flange • Dimensions

90M130 SAE Flange: Motors

in.
[mm]

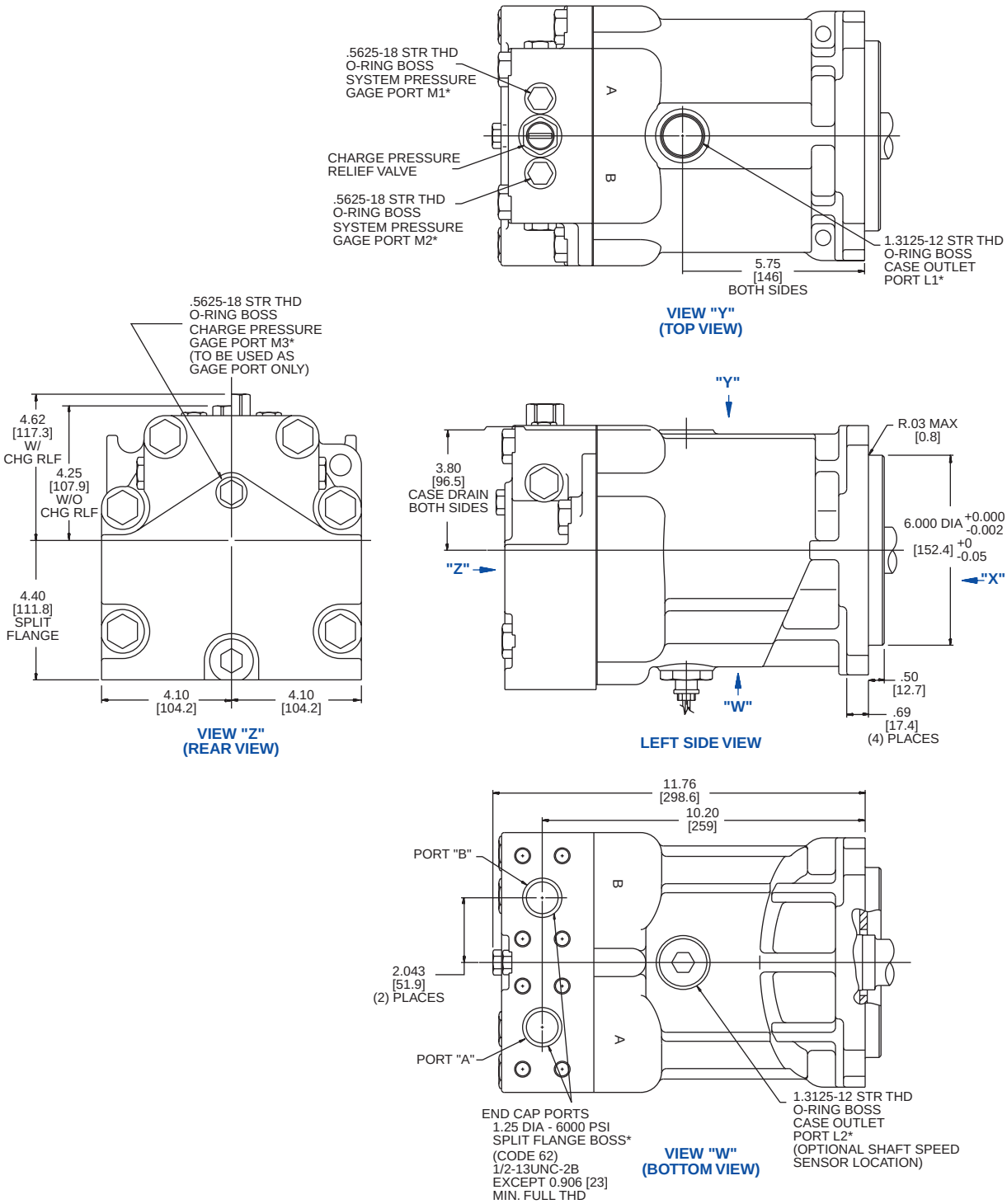

*All SAE straight thread O-Ring ports per SAE J1926 (Fittings per SAE 514).
Shaft rotation is determined by viewing motor from output shaft end.

Contact your SAUER-SUNDSTRAND representative for specific installation drawings.

P100 527E

90M130 SAE Flange: Mounting Flange, Shaft

in.
[mm]

Splined Output Shaft Options							
Output Shaft Option	Shaft Diameter T	Full Spline Length U	Major Dia. V	Pitch Dia. W	Number of Teeth Y	Pitch Z	Length S
F1	1.36 (34.5)	1.67 (42.5)	1.730 (43.94)	1.6250 (41.275)	13	8/16	2.625 (66.7)
C8	1.48 (37.5)	1.67 (42.5)	1.730 (43.94)	1.6875 (42.862)	27	16/32	2.625 (66.7)

T101 088E

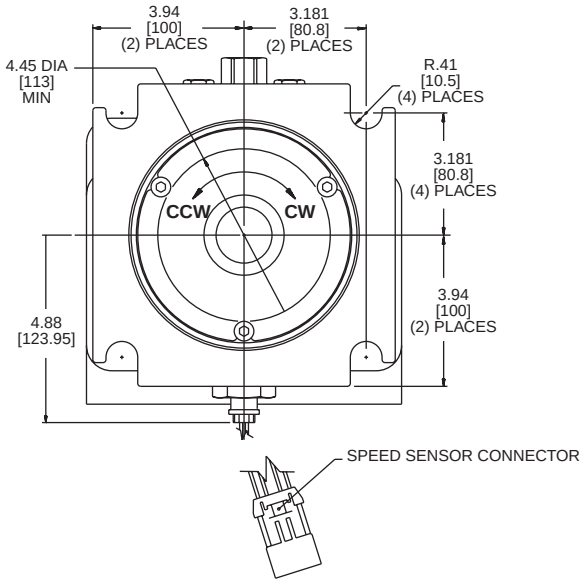

VIEW "X"
(FRONT VIEW)

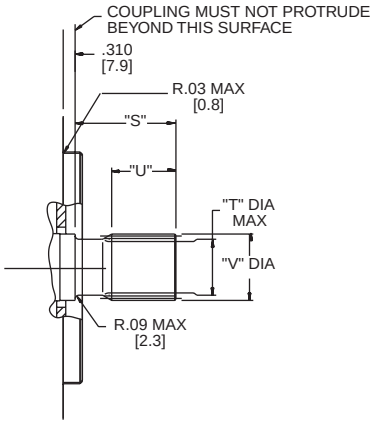

SPLINED SHAFT OPTIONS
(SEE TABLE)

Motor Shaft Rotation	Flow Direction	
	Port "A"	Port "B"
Clockwise (CW)	OUT	IN
Counterclockwise (CCW)	IN	OUT

T101 089E

*All SAE straight thread O-Ring ports per SAE J1926 (Fittings per SAE 514).
Shaft rotation is determined by viewing motor from output shaft end.

Contact your SAUER-SUNDSTRAND representative for specific installation drawings.

P100 528E

Notes

Hydraulic Power Systems

SAUER-SUNDSTRAND Hydraulic Power Systems - Market Leaders Worldwide

SAUER-SUNDSTRAND is a world leader in the design and manufacture of Hydraulic Power Systems. Research and development resources in both North America and Europe enable SAUER-SUNDSTRAND to offer a wide range of design solutions utilizing hydraulic power system technology.

SAUER-SUNDSTRAND specializes in integrating a full range of system components to provide vehicle designers with the most advanced total-design system.

SAUER-SUNDSTRAND is Your World Source for Controlled Hydraulic Power Systems.

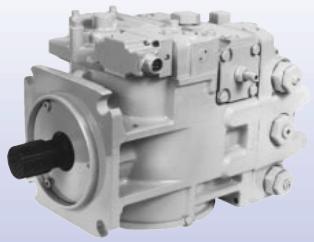

Heavy Duty Axial Piston Pumps and Motors

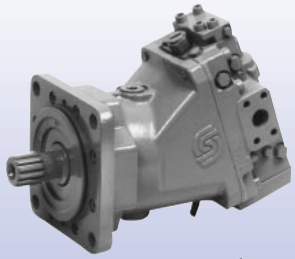

Heavy Duty Bent Axis Variable Motors

Cartridge Motors/ Compact Wheel Drives

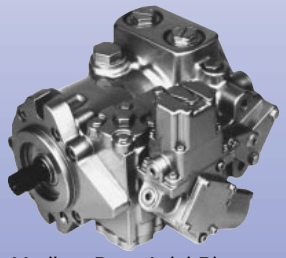

Medium Duty Axial Piston Pumps and Motors

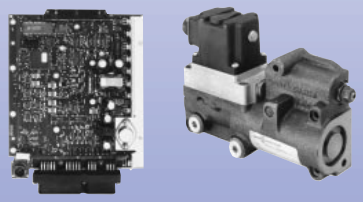

Microcontrollers and Electrohydraulic Controls

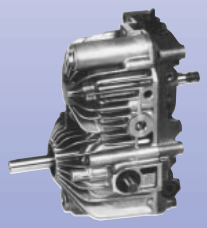

Hydrostatic Transmission Packages

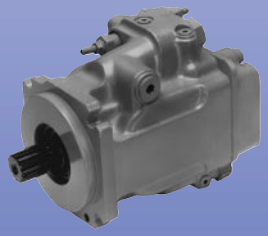

Open Circuit Axial Piston Pumps

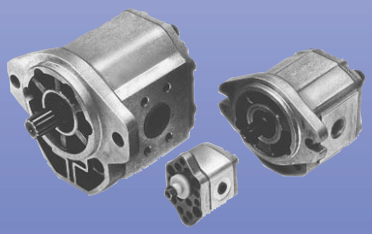

Gear Pumps and Motors

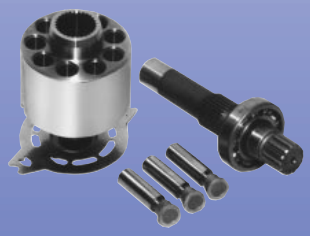

Genuine Service Parts

Worldwide Service Support

SAUER-SUNDSTRAND provides comprehensive worldwide service for its products through an extensive network of Authorized Service Centers strategically located in all parts of the world.

Look to SAUER-SUNDSTRAND for the best in WORLDWIDE SERVICE.

SAUER-SUNDSTRAND COMPANY
2800 East 13th Street • Ames IA 50010 • U.S.A.
Phone: (515) 239-6000 • FAX: (515) 239-6618

SAUER-SUNDSTRAND GMBH & CO.
Postfach 2460 • D-24531 Neumünster
Krokamp 35 • D-24539 Neumünster • Germany
Phone: (04321) 871-0 • FAX: (04321) 087 122

BLN - 10030 • Revision C • October 1998