Joystick Prof 1, PVRE and PVRET

Technical Information

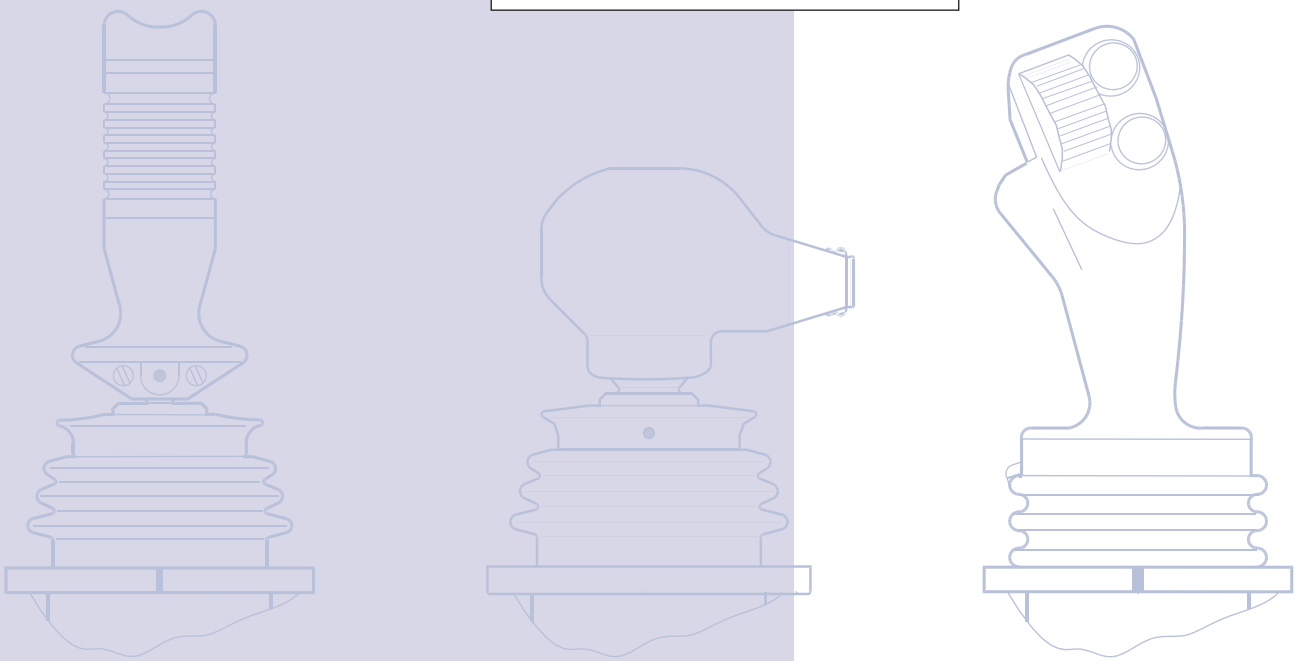

Joystick Prof 1, PVRE and PVRET
Technical Information
Contents

Revision History

Table of Revisions

Date	Page	Changed	Rev
Mar 2008	All	First edition	AA
Apr 2010	36	Japan location	AB
Jun 2010	14	Drawing adjusted	AC
Sep 2010	36	New backcover	AD

Contents

General 3
- Application 3
- Mechanical design 3
- Main function module 4
- Connector 4
- Direction switches 5
- Neutral position switch 5
- Cables 5

Prof joysticks 6
- Prof 1 8
- Colour band 8
- Proportional modules 8
- Push buttons 8
- Location and orientation of modules 9
- Electronic modules 9
- connections – basic version 13
- connections – standard, extended versions 14
- Technical data 15
- Dimensions 16
- Examples of use 17
- Standard programme 19
- Selection overview 20
- STANDARD PROGRAMME DETAILS 22
- Prof 1 Joystick specification 23

PVRE series 2 24
- Versions 24
- Location and orientation of functions 25
- Connections 26
- Technical data 27
- Dimensions 28
- Examples of use 29

PVRET series 2 30
- Version 30
- Connections 30
- Technical data 31
- Dimensions 31
- Examples of use 32

© 2010 Sauer-Danfoss. All rights reserved.
Sauer-Danfoss accepts no responsibility for possible errors in catalogs, brochures and other printed material. Sauer -Danfoss reserves the right to alter its products without prior notice. This also applies to products already ordered provided that such alterations can be made without affecting agreed specifications. All trademarks in this material are properties of their respective owners. Sauer-Danfoss, the Sauer-Danfoss logotype, the Sauer-Danfoss S-icon, PLUS+1™, What really matters is inside® and Know-How in Motion™ are trademarks of the Sauer-Danfoss Group.

Frontpage: F300 746, F300 747, F300 748, F300 749, Drawing 162B96

Application

F300 749

PVRE, PVRET and Prof joysticks from Sauer-Danfoss are generally used together with PVGs and PVEs, but can be used in any application. A complete range of joysticks from the simple PVRE handle with X-Y functions to the Prof 1 ergonomic handle with rollers and pushbuttons are available.

Mechanical Design

All handle variants share the same mechanical base to which the electronics are mounted. The mounting flange of the joystick is an integrated part of the mechanical base, which also contains a linkage that transfers handle movement to the electronics. The linkage also includes neutral positioning springs.
The neutral positioning springs are designed to ensure a smooth return of the handle into neutral position. The maximum spring force is optimised to be just strong enough to keep the handle in position, even during operation in rough terrain, without interfering with the operation of the joystick or impairing it's ergonomic characteristics.

Spring force	8-10 N

Main Function Module

(Prop1 and Prop2)
The primary functions of the joystick are defined as its X and Y directions.

Main functions are potentiometers with integrated direction switches.

Each function has a working angle of ±18°.

Signal range	Neutral signal
25% – 75%	50%
of supply voltage	

Note: When moving the handle diagonally the maximum signal range is not available.

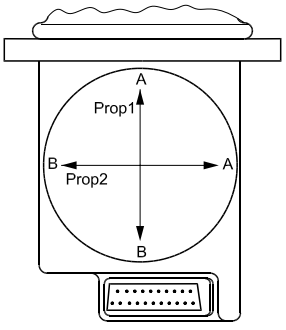

162B89.10

Connector

All joysticks come with a common **25 pin male SUB-D connector** with M3 screws. (MIL - DTL - 24308)

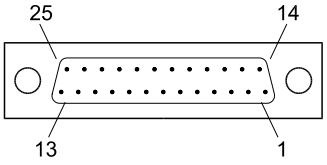

162B78.11

Direction Switches

Proportional modules have integrated direction switches. One switch is activated when the module is moved in the A direction, the other is activated when the module is moved in the B direction.

The direction switches are used to activate the neutral position switch, and with some electronic modules the direction switch outputs are available in the connector. (See details about electronics.)
There is a dead band in the joystick of approximately 1.5° before the direction switches are activated.

Note: The direction switches are independant from the signal voltage

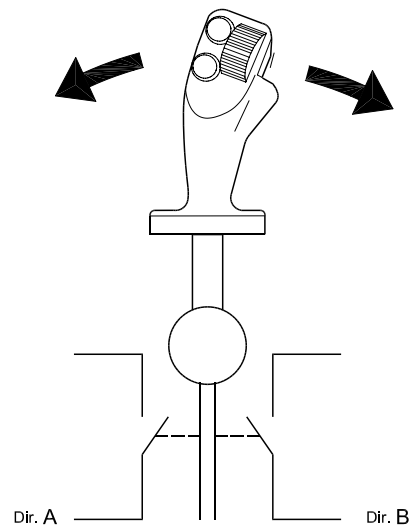

162B90.10

Neutral Position Switch

The neutral position switch can supply up to 3 PVEs or other devices (see electrical details), and functions as both a power save and a safety switch.
The switch is only activated when one or more of the proportional modules are activated.
The operation of the neutral position switch is dependant on signals from the direction switches.
Sauer-Danfoss recommends that the neutral position switch be used to the greatest possible extent.

Note: When using the neutral position switch all three U_{DC} wires as well as all three Neutral Switch wires **must** be connected.

Cables

For compatibility with different applications, a selection of mating cables are available:

Code no. 162B....	Length mm [in]	Plug type	Type
6013	4000 [157]	Leads	Vertical SUB-D
6014	4000 [157]	Leads	Horizontal Sub-D
6015	500 [19]	Clipper	–
6016	230 [9]	TrimTrio	–
6017	230 [9]	Tabs	PVRE compatibility

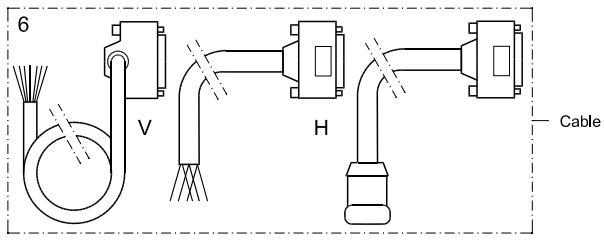

162B93.10 .10

Prof Joysticks

The Prof family of joysticks is built around a series of modules that can be combined in various ways to create the joystick that best fits the application.
Each joystick has a base module with proportional functions (X & Y); a colour band for decoration and identity, a handle, and depending on handle selection, a number of pushbuttons and/or proportional functions.

Handle / Top functions

To provide optimum user comfort, a selection of handles is available. Each handle offers a choice of push buttons and / or proportional functions positioned for ease of use and comfort.

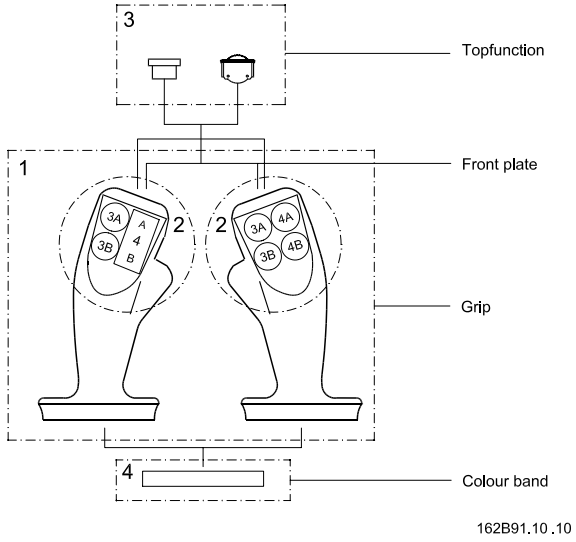

Prof Joysticks

Base module

A number of electronic modules provide various performance levels to cater for different needs in different applications.

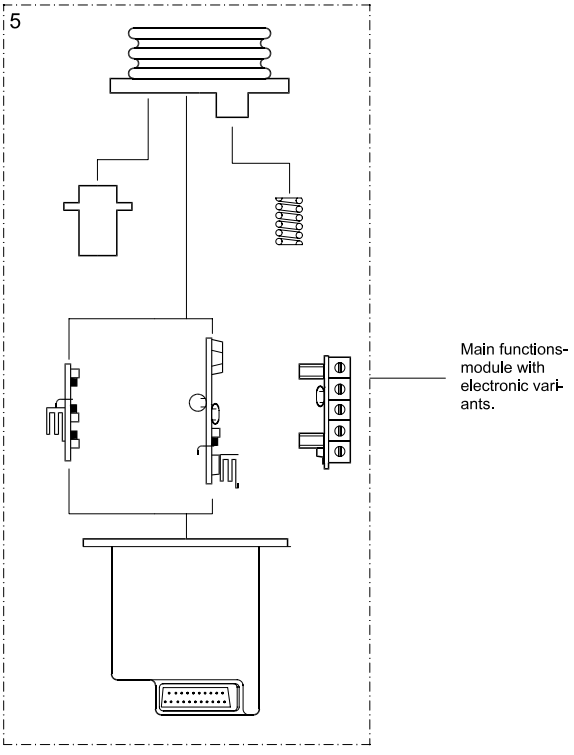

162B92.10

Cable

For easy integration into existing applications cables with different connectors are available as accessories, see page 5.

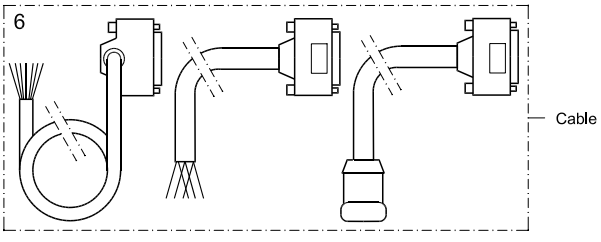

162B93.10

Prof 1

A professional handle for intensive operation; with a forward-leaning, curved, ergonomic shape. The leather-like grained surface allows the palm of the hand to breathe during operation.

The Prof 1 handle can be fitted with up to seven push buttons, or up to two proportional functions with up to five push buttons.

For location and combination of function modules see the overview.

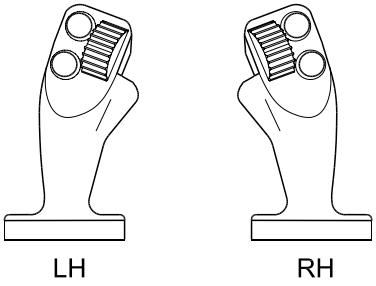

162B94.10

Color Band

A choice of colors is available for the band at the base of the handle.

Colors
Yellow
Black
Red

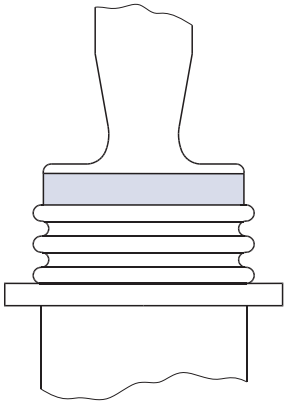
162B08.10

Proportional Modules

The roller function module is a spring centred potentiometer with integrated direction switches.

Working angle: ±42°
Direction switch angle: 3.5 ±2°

Signal range	Neutral signal
25% – 75%	50%
of supply voltage	

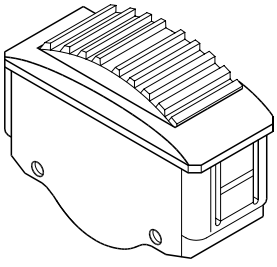
162B62.10

Push Buttons

The handle can be fitted with up to seven independent On/Off functions.

The buttons are protected against shocks and unintentional activation by a high collar.

Colors
Yellow
Black
Red
Grey

162B52.10

Location and Orientation of Modules

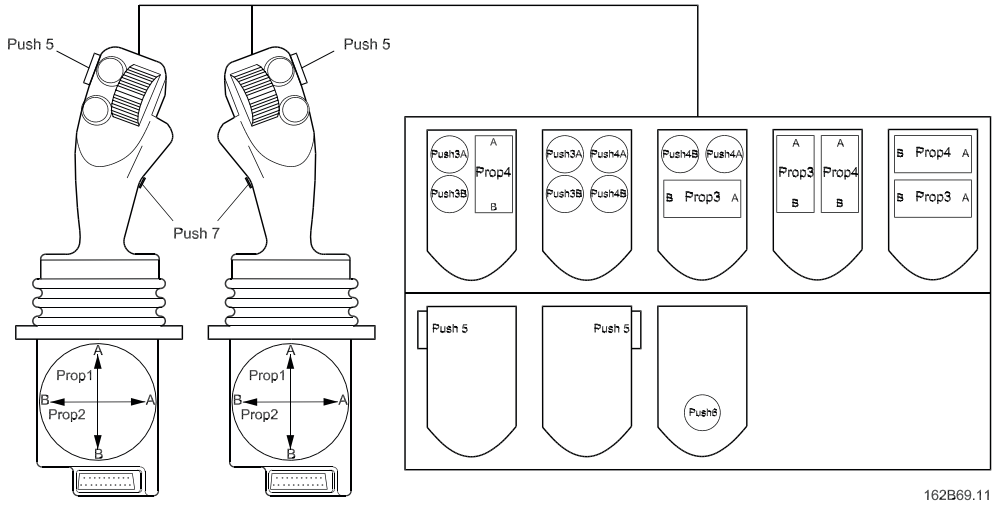

Electronic Modules

The electronic modules are available with four different performance levels: Basic, Standard, Extended, and CAN-enabled.

Basic

The Basic level module is a connection platform that contains no electronics. This version offers raw signals from function modules, proportional modules, and push buttons.

The Basic level module contains no kind of protection, amplification, neutral switches, relays, or filtering and meets no legal specifications.
The proportional functions in the basic module are configured like this:

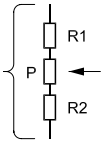

The value of P is 5 KΩ, R1 and R2 are 1.125 KΩ (See technical data for tolerances).
This configuration ensures that the output signal will be at least 25%-75% of the supply voltage.

Note: Because of the output impedance of the sensors, it is recommended to use an amplifier if the application draws more than 15 µA.

Electronic Modules

Standard

The Standard level electronic module provides amplifiers, inverting and signal relays on all proportional outputs, and an electronic switch on all On/Off outputs.

The signal relays are controlled by the power supply in such a way that a power failure will disconnect the output. (This will automatically send a Sauer-Danfoss proportional valve to neutral position)

When used together with a Sauer-Danfoss proportional valve signal inversion causes the joystick to move the spool in the direction opposite to the default. This is equivalent to swapping the hoses on the valve outlets.

Note: The directional switches are not affected by the signal inversion.

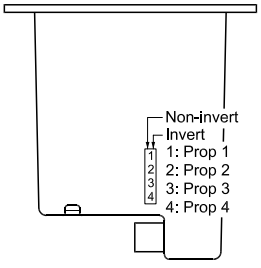

162B46.10

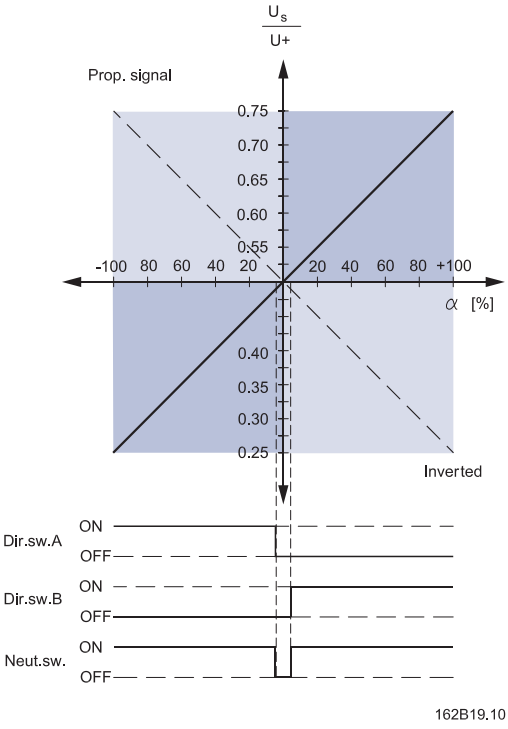

162B19.10

Factory setting: Non-inverted

Electronic Modules

Extended

The Extended level electronic module has the same configuration as the Standard level module. Additionally it has adjustable proportional functions. The Extended level module offers the option of individual signal adaptation (flow adjustment) and common dead-band compensation.

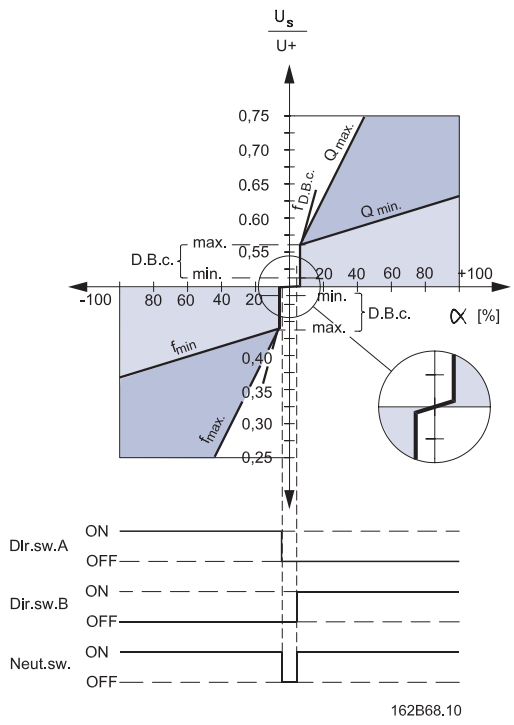

The dead band compensation (D.B.c.) ensures that the dead band of the valve is reduced to a minimum movement of the grip.
The dead band compensation is only active outside the neutral range, which ensures normal amplification within the neutral position range.
The dead band compensation is set for all four proportional functions on one potentiometer.

For each proportional function there are two integrated potentiometers that independently control the gain for the A and B directions of the signal output without limiting the movement range of the handle (adjustable flow range).
The gain of each function can be adjusted from 0.25 to 2.00. This has no effect within the D.B.c. range.

Electronic Modules

Location of potentiometers for adjusting D.B.c and gain:

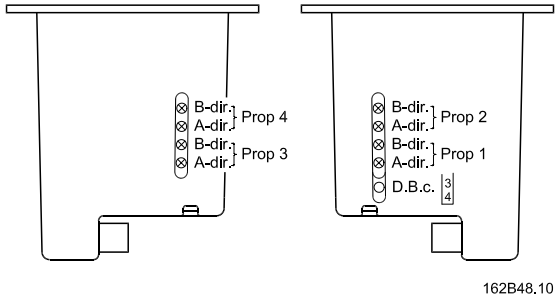

Factory setting @ 12 V	
Dead band compensation	0.42 V
Signal gain	0.86

CAN-enabled

There is a CAN-enabled electronic module available for the Prof family of joysticks. The module provides a standard CANOpen interface. For further information read Sauer-Danfoss Technote on CAN bus components and see our webpage: http://www.sauer-danfoss.com

Connections – Basic

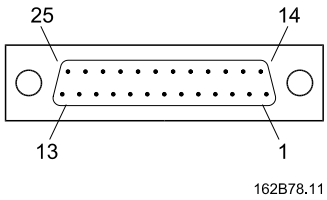

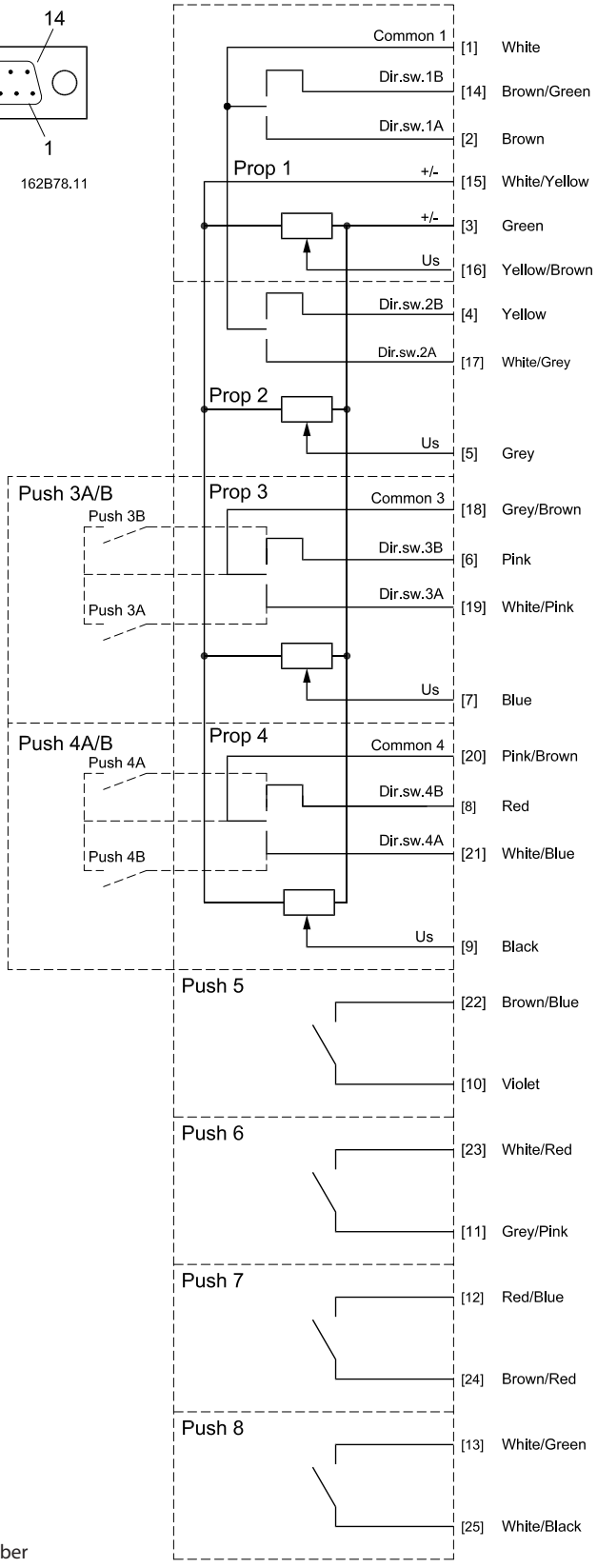

Numbers in [ ] indicate pin number in sub-D connector.

Connections
– Standard
– Extended

{N}	(13) Violet	[10]
{U}	(18) Green (18) White/Yellow (18) Brown/Yellow	[3] [15] [16]
{M}	(12) Brown/Blue	[22]

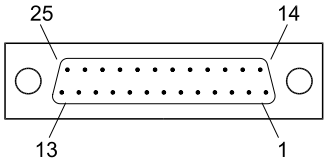

162B78.11

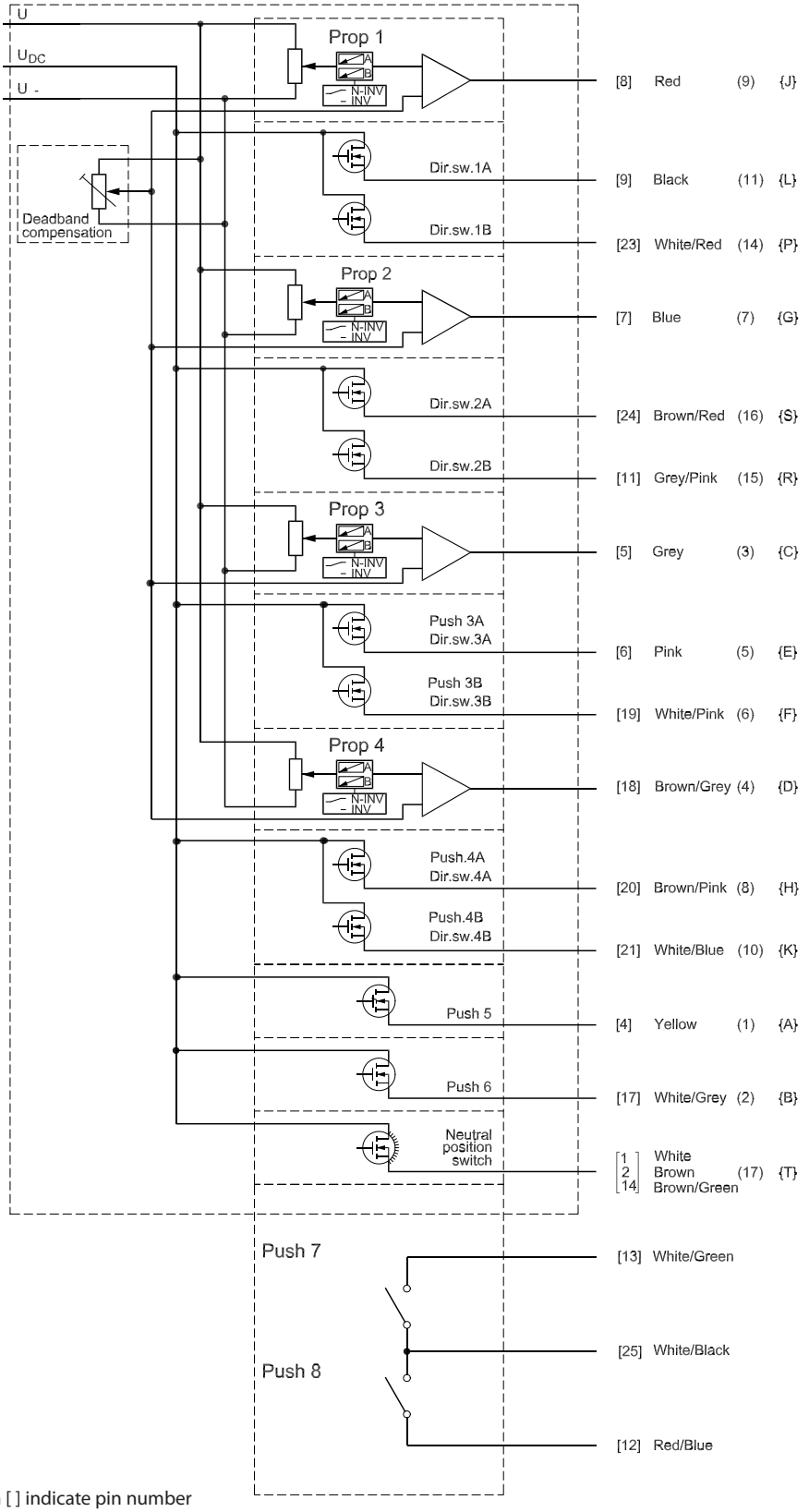

Numbers in [ ] indicate pin number in sub-D connector.

162B59.12

Technical Data

All

Enclosure	Below flange	IP 21
	Above flange	IP 50
Ambient temperature		–30 - +60° [–22 - +140°F]
Max. force on handle		1000 N static

Basic

Supply voltages	U+	≤30 V
Proportional functions 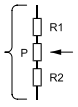	P	5 KΩ ±50%
	R1 & R2	P × 0.225 ±1%
Max signal current		15 µA (1 mA peak)
Max direction switch load for all proportional functions		30 V_{DC} / 2mA
Max push button load		30 V_{DC} / 50mA

Note: There are no electronics built in to the Basic level module.

Standard and Extended

Supply voltages		U_{DC}, U_+	10-30 V	
		Max ripple	5%	
Current consumption			≈150 mA	
Signal voltage U_s	U_s	Min → Max	0.25 → 0.75	
	U_+	Neutral position	0.50	
Signal load in neutral position		Load type	PVE	Other
		Load impedance	>6 kΩ	>15 kΩ
Signal current at max movement		@ U_{DC} = 12 V	U_s - 0.5 × U_+ 6 kΩ ± 0.6 mA	U_s 15 kΩ 0.2 → 0.6 mA
		@ U_{DC} = 24 V	± 1.2 mA	0.4 → 1.2 mA
Signal current in neutral position		@ U_{DC} = 12 V	± 0 mA	0.4 mA
		@ U_{DC} = 24 V	± 0 mA	0.8 mA
Inverter		Non inverted	Output signal = U_s	
		Inverted	Output signal = -1 × (U_s – 0.5×U_+) + 0.5×U_+	
Push buttons and directions switches for all proportional functions		Max load	0.6 A	
Push 7 & Push 8		Max load	30 V_{DC} / 50 mA	
Neutral position switch		Max load	3 A	

Extended only

Signal regulation U_s	U_s	Min (50%)	0.37 → 0.63 at 100% movement
	U_+	Max (200%)	0.25 → 0.75 at 50% movement
Dead band compensation	U_s	Min	0.00
	U_+	Max	0.06

Dimensions

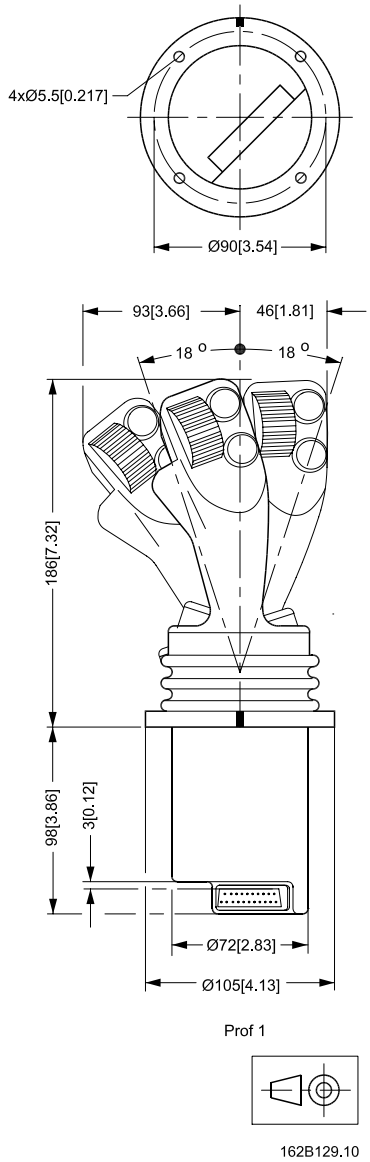
4xØ5.5[0.217]
Ø90[3.54]
93[3.66]
46[1.81]
18 °
18 °
186[7.32]
98[3.86]
3[0.12]
Ø72[2.83]
Ø105[4.13]
Prof 1
162B129.10

Examples of Use

Signal leads must not also function as supply leads unless the distance between PVE and terminal board is less than 3 m [120 in] and the lead cross-section is ≥ 0.75 mm² [AWG 18].

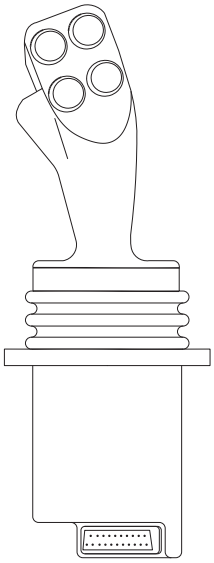

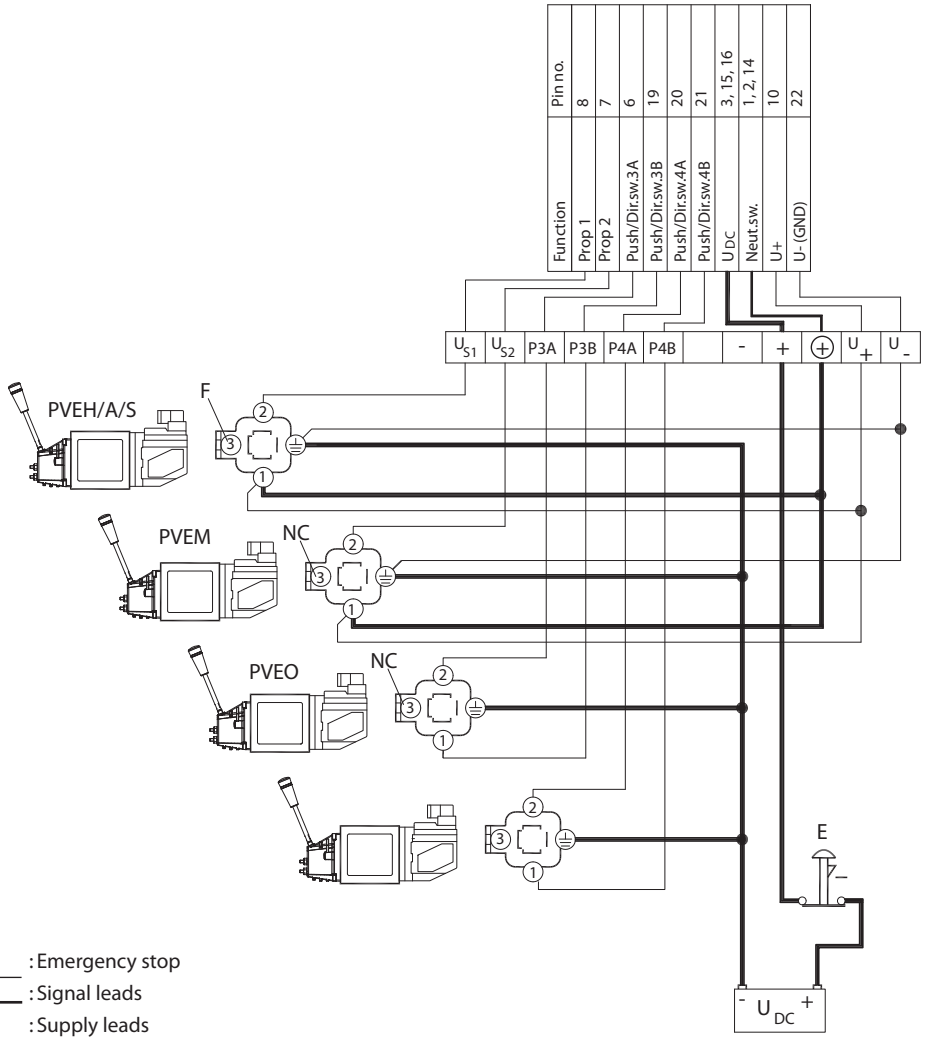

V310116.A

Examples of Use

Basic version used with controller

When using the Basic level module with a controller, it is recommend to use a filter similar to the one in the figure below to ensure a symmetric and limited load on the proportional sensors.

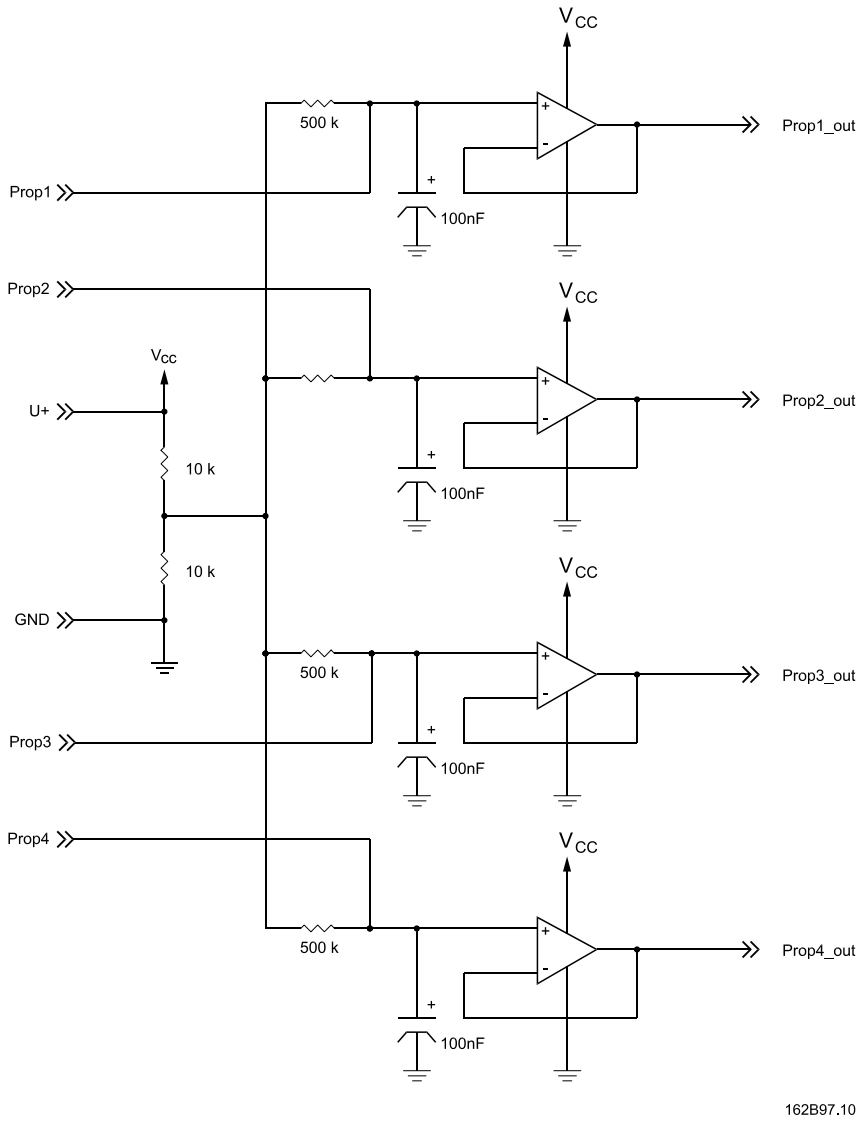

Note: There are no electronics built in to the Basic level module

Standard Programme

The joystick variants offer a wide range of different combination possibilities. This may result in several code numbers with identical functions (such as location of push button and choice of color).
Based on experience we have therefore put together a standard program.
The standard programme of joysticks is available in the following variants:

- 4-way mechanical
- Yellow push buttons with flat collar
- Red color bands
- Standard electronics (excl. basic and extended with flow and dead band compensation).

No. of prop	No. of ON/OFF	Code numbers Left hand			Code numbers Right hand
2	0	162F1116			162F1100
2	1	162F1117			162F1101
2	2	162F1118			162F1102
2	3	162F1119			162F1103
2	4	162F1120			162F1104
2	5	162F1121			162F1105
2	6	162F1122			162F1106
3	0	162F1134			162F1132
3	1	162F1135			162F1133
3	2	162F1123			162F1107
3	3	162F1124			162F1108
3	4	162F1125			162F1109
3	2	162F1126			162F1110
3	3	162F1127			162F1111
3	4	162F1128			162F1112
4	0	162F1129			162F1113
4	1	162F1130			162F1114
4	2	162F1131			162F1115

Selection Overview

3. Top functions

		Position 3A, 3B, 4A, 4B, 5, 6, 7	Position 3, 4
Code no. 162B....		**Push button**	**Proportional roller**
Color	Black	3000	3100
	Red	3002	–
	Yellow	3004	–
	Grey	3008	–

1. Grip

Code no. 162B....			Description
Black	Grey		
1050	1000	Right hand	Without On/Off push button in the side
	1001	Right hand	With On/Off push button in the side (Push 5)
	1004	Right hand	With dead mans button (Push 7)
	1005	Right hand	With On/Off push button in the side (Push 5) and dead mans button (Push 7)
1150	1100	Left hand	Without On/Off push button in the side
	1101	Left hand	With On/Off push button in the side (Push 5)
	1104	Left hand	With dead mans button (Push 7)
	1105	Left hand	With On/Off push button in the side (Push 5) and dead mans button (Push 7)

4. Color band

Code no. 162B....	Color
4002	Red
4003	Yellow
4000	Black

6. Cable

Code no. 162B....	Length [mm]	Plug type	Note
6013	4000	Leads	Vertical
6014	4000	Leads	Horizontal
6015	500	Clipper	–
6016	230	TrimTrio	–
6017	230	Tabs	PVRE compatibility

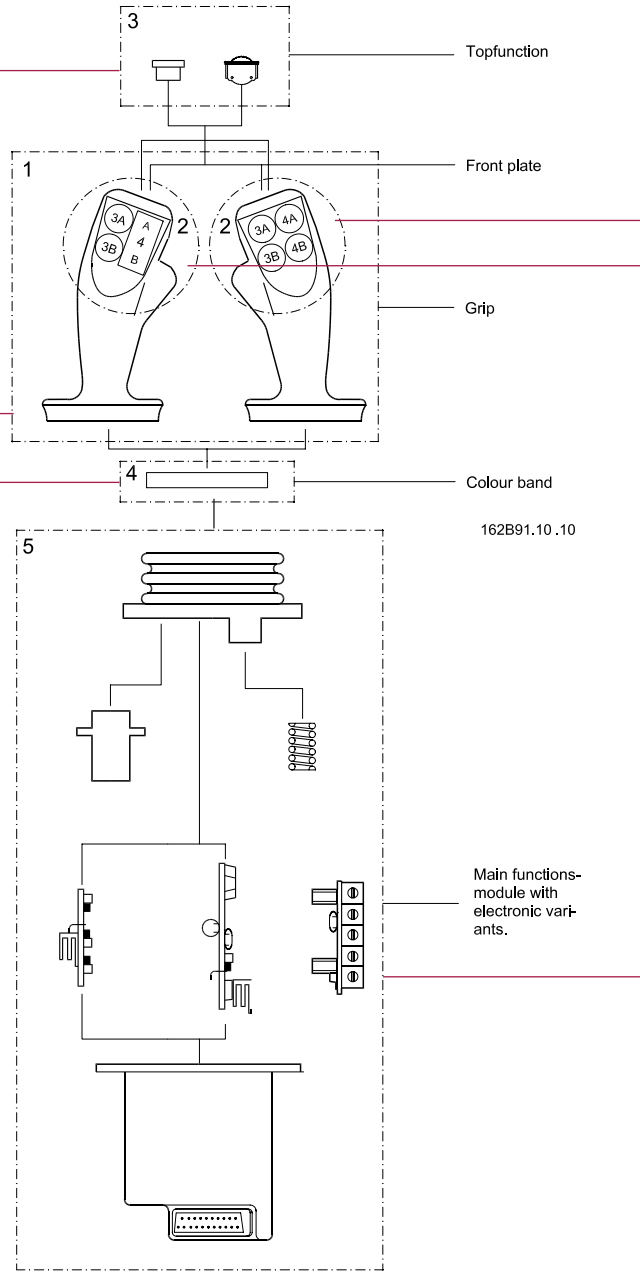

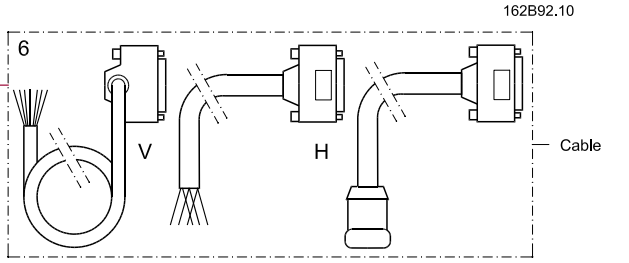

Selection Overview

2. Front plates

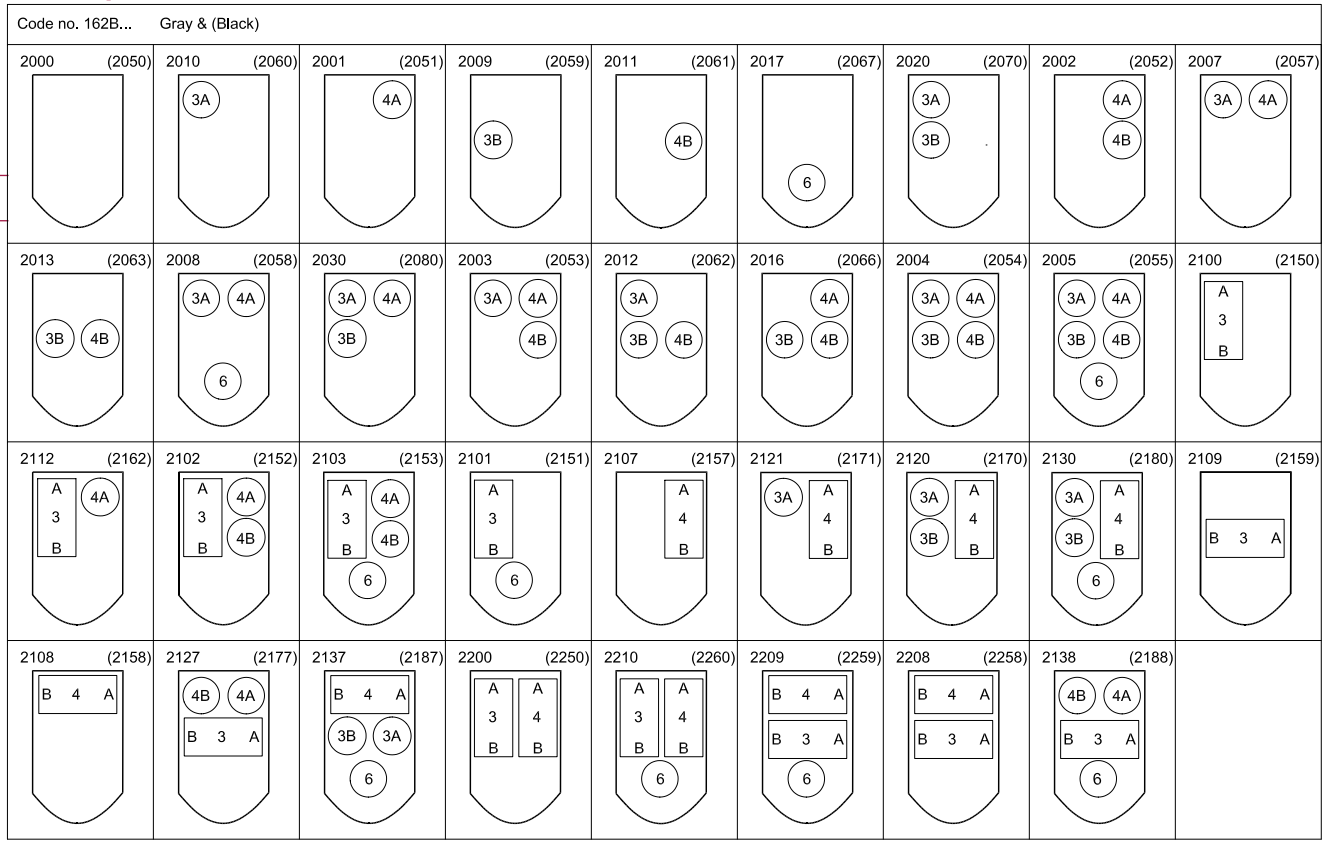

5. Electronics

Code no. 162B....	Type	Description
5000	Basic	2 - 4 proportional functions, 0 - 7 ON / OFF functions
5002	Standard	2 - 4 proportional functions with direction switch and neutral switch 0 - 7 ON / OFF functions
5004	Extended	2 - 4 proportional functions with direction switch and neutral switch Electronic flow adjustment and dead band compensation on one or more prop functions 0 - 7 ON / OFF functions
5100	CAN enabled	See CAN Tech-Note

Standard Programme Details

This table shows a breakdown of contents of the standard programme joysticks.

Code numbers	Front plate	Grip code	Electronic
162F1100	162B2000	162B1000	162B5002
12F1101	162B2010	162B1000	162B5002
12F1102	162B2020	162B1000	162B5002
162F1103	162B2030	162B1000	162B5002
162F1104	162B2004	162B1000	162B5002
162F1105	162B2005	162B1000	162B5002
162F1106	162B2005	162B1001	162B5002
162F1107	162B2102	162B1000	162B5002
162F1108	162B2103	162B1000	162B5002
162F1109	162B2103	162B1001	162B5002
162F1110	162B2127	162B1000	162B5002
162F1111	162B2127	162B1001	162B5002
162F1112	162B2137	162B1001	162B5002
162F1113	162B2200	162B1000	162B5002
162F1114	162B2200	162B1001	162B5002
162F1115	162B2210	162B1001	162B5002
162F1116	162B2000	162B1100	162B5002
162F1117	162B2001	162B1100	162B5002
162F1118	162B2002	162B1100	162B5002
162F1119	162B2003	162B1100	162B5002
162F1120	162B2004	162B1100	162B5002
162F1121	162B2005	162B1100	162B5002
162F1122	162B2005	162B1101	162B5002
162F1123	162B2120	162B1100	162B5002
162F1124	162B2130	162B1100	162B5002
162F1125	162B2130	162B1101	162B5002
162F1126	162B2127	162B1100	162B5002
162F1127	162B2127	162B1101	162B5002
162F1128	162B2137	162B1101	162B5002
162F1129	162B2200	162B1100	162B5002
162F1130	162B2200	162B1101	162B5002
162F1131	162B2210	162B1101	162B5002
162F1132	162B2100	162B1000	162B5002
162F1133	162B2112	162B1000	162B5002
162F1134	162B2107	162B1100	162B5002
162F1135	162B2121	162B1100	162B5002

Prof 1 Joystick Specification

Prof 1 Joystick Specification

Customer specification

Code no:		
Customer:		
Application:		
Subsidiary/Dealer:		
1. Grip		
2. Front plate		
3. Top functions	Position (push button colour)	Position (roller)
	3A:	3:
	3B:	
	4A:	4:
	4B:	
	5:	
	6:	
	7: [1]	
4. Colour band		
5. Main function module	Set-up	
	Inverted [2] (✓ = inverted)	Flow reduction and dead-band compensation [3] (✓ = ON)
	Prop. 1 ☐	Prop. 1 ☐
	Prop. 2 ☐	Prop. 2 ☐
	Prop. 3 ☐	Prop. 3 ☐
	Prop. 4 ☐	Prop. 4 ☐
6. Cable		
Compiled by: Date:	Checked by: Date:	

1) Only for deadman button
2) Only for standard and extended level options. Factory setting is "non-inverted" if nothing else is mentioned
3) Only for extended level option. Factory setting is "on" if nothing else is mentioned.

PVRE Series 2

The PVRE series 2 is the successor to the popular PVRE joystick. This joystick builds on the known technology from the Prof family of joysticks as well as the well known handles from the PVRE series 1 joysticks.

Versions

The PVRE handle is available in three different variants: No top function, with prop 3, and with two On/Off functions (rocker switches).

Code no. 162F....	**1310 (1300)**	**1311 (1301)**	**1312 (1302)**	**1313 (1303)**	**1314 (1304)**
Symbol	155B60.10	155B62.10	155B64.10	155B63.10	155B147.10
Prop1	X	X	X	X	X
Prop 2	X	X	–	–	X
Prop 3	–	–	–	–	X
On/Off	X	–	X	–	–

( ) Incl. PVRE series 1 adapter ring for mounting in place of a PVRE Series 1

Location and Orientation of Functions

It is possible to turn the PVRE handle through 180° to make the direction of movement fit the application.

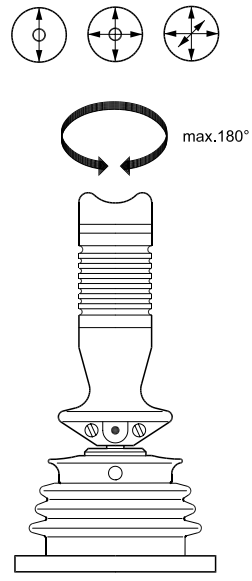

155B544.11

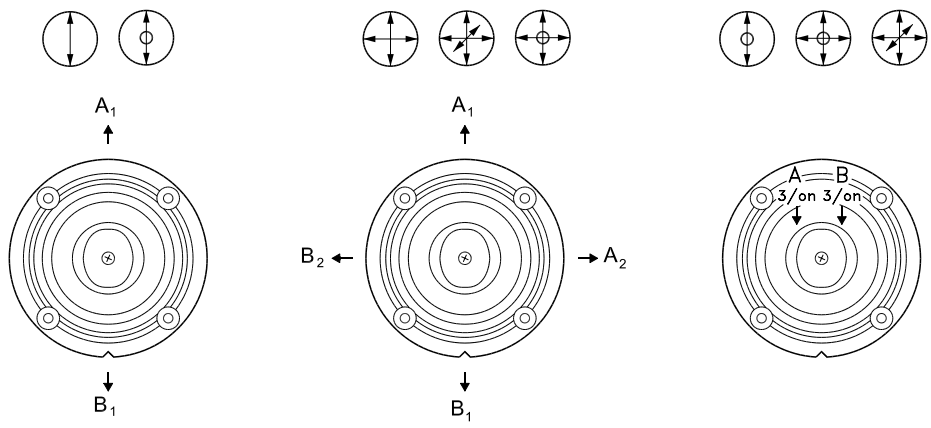

155B545.10

Connections

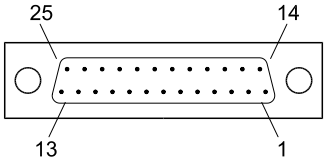

162B78.11

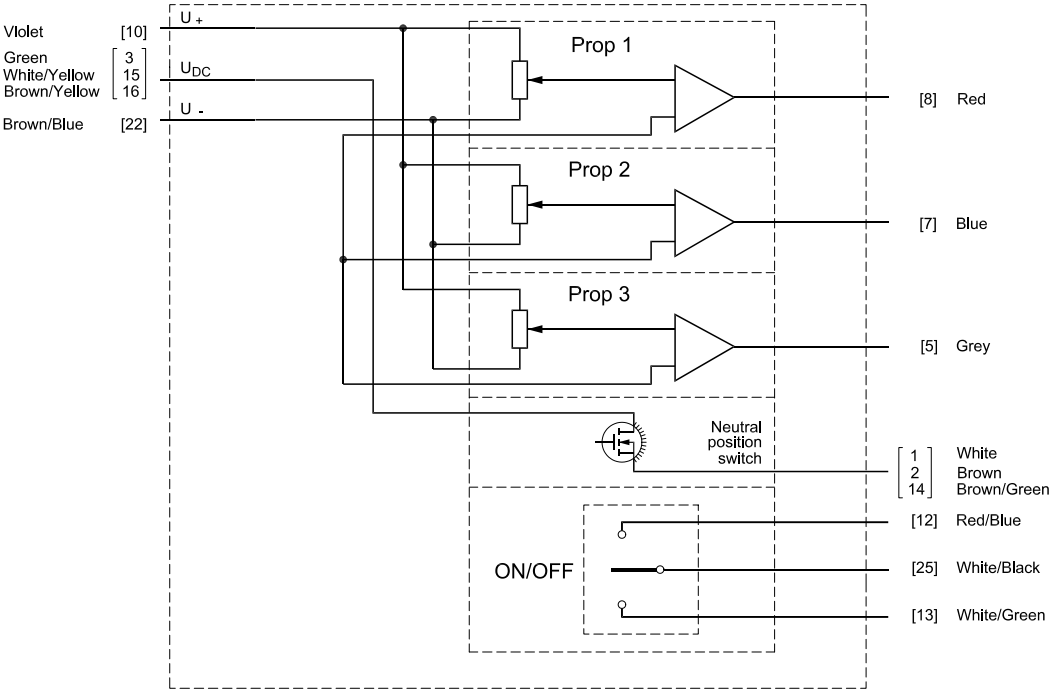

162B79.10

Numbers in [ ] indicate pin number in sub-D connector.

Technical Data

Enclosure		Below flange	IP 21	
		Above flange	IP 65	
		With On/Off	IP 42	
		With Prop 3	IP 65	
Ambient temperature			–30 - +60° [–22 - +140°F]	
Supply voltages		U_{DC}	10-30 V	
		Max ripple	5%	
Current consumption			≈150 mA	
Signal voltage	$\frac{U_s}{U_{DC}}$	Min → Max	0.25 → 0.75	
		Neutral position	0.50	
Signal load in neutral position		Load type	PVE	Other
		Load impedance	>6 kΩ	>15 kΩ
Signal current at max movement			$\frac{U_s - 0.5 \times U_{DC}}{6\ k\Omega}$	$\frac{U_s}{15\ k\Omega}$
		@ U_{DC} = 12 V	±0.6 mA	0.2 → 0.6 mA
		@ U_{DC} = 24 V	±1.2 mA	0.4 → 1.2 mA
Signal current in neutral position		@ U_{DC} = 12 V	±0 mA	0.4 mA
		@ U_{DC} = 24 V	±0 mA	0.8 mA
On/Off switch		Max load	0.6 A	
Neutral position switch		Max load	3 A	

Dimensions

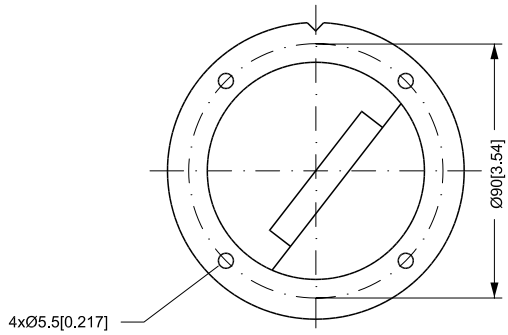
Ø90[3.54]
4xØ5.5[0.217]

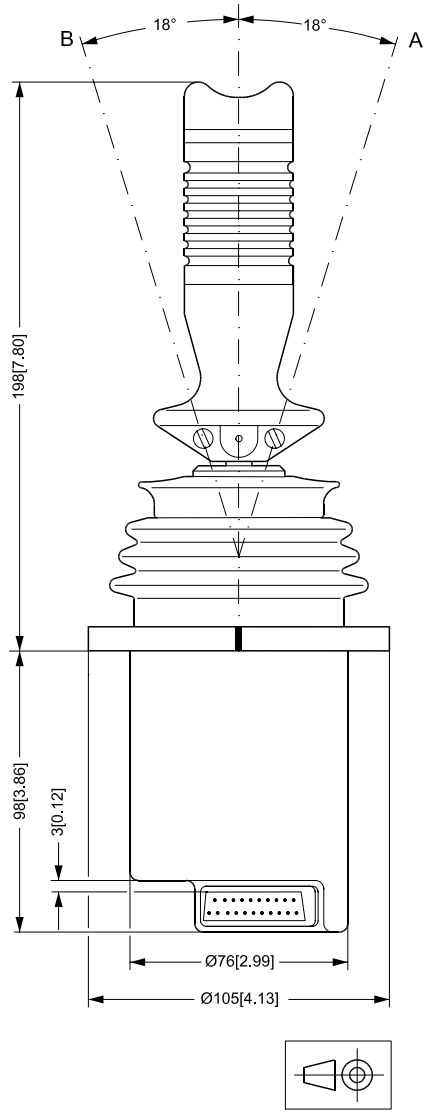
B
18°
18°
A
198[7.80]
98[3.86]
3[0.12]
Ø76[2.99]
Ø105[4.13]
162B130.10

Examples of Use

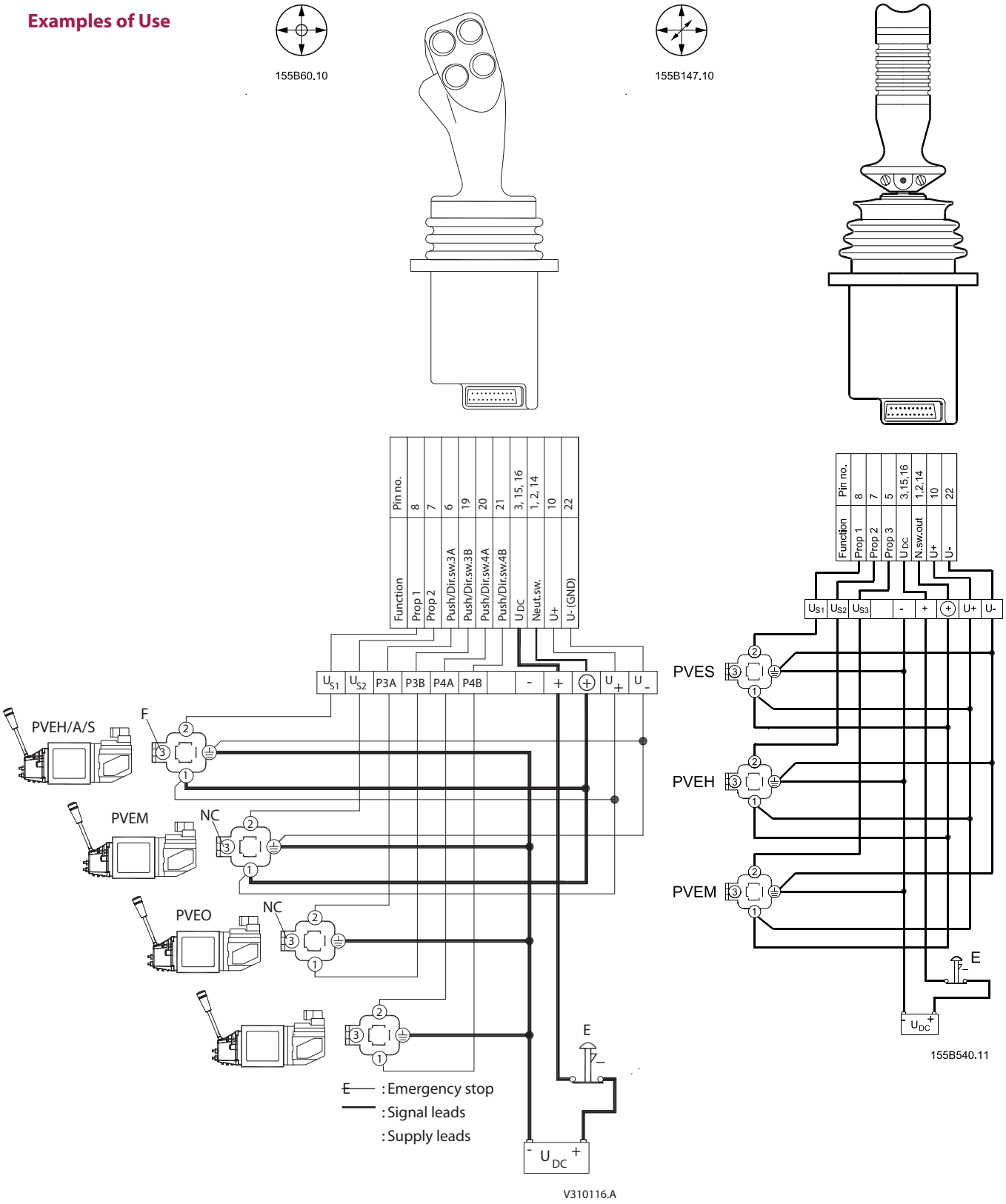

PVRET Series 2

The PVRET series 2 is the successor to the popular PVRET joystick. This joystick builds on the known technology from the Prof family of joystick as well as the traditional handles from the PVRET series 1.

Version

Code no. 162F....	1315 (1305)
Symbol	155B532.11

( ) Incl. PVRE series 1 adapter ring

Connections

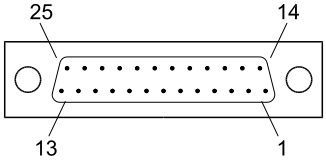

162B78.11

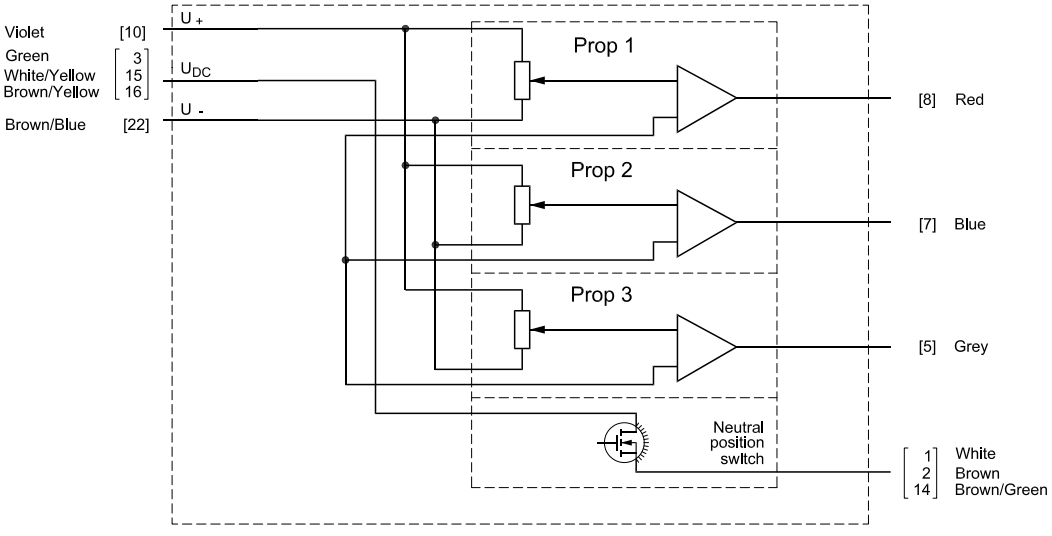

162B80.10

Numbers in [ ] indicate pin number in sub-D connector.

Technical Data

Enclosure		Below flange	IP 21	
		Above flange	IP 54	
Ambient temperature			–30 - +60° [–22 - +140°F]	
Supply voltages		U_{DC}	10-30 V	
		Max ripple	5%	
Current consumption			≈150 mA	
Signal voltage	$\frac{U_s}{U_{DC}}$	Min → Max	0.25 → 0.75	
		Neutral position	0.50	
Signal load in neutral position		Load type	PVE	Other
		Load impedance	>6 kΩ	>15 kΩ
Signal current at max movement			$\frac{U_s - 0.5 \times U_{DC}}{6\ k\Omega}$	$\frac{U_s}{15\ k\Omega}$
		@ U_{DC} = 12 V	±0.6 mA	0.2 → 0.6 mA
		@ U_{DC} = 24 V	±1.2 mA	0.4 → 1.2 mA
Signal current in neutral position		@ U_{DC} = 12 V	±0 mA	0.4 mA
		@ U_{DC} = 24 V	±0 mA	0.8 mA
On/Off switch		Max load	0.6 A	
Neutral position switch		Max load	3 A	

Dimensions

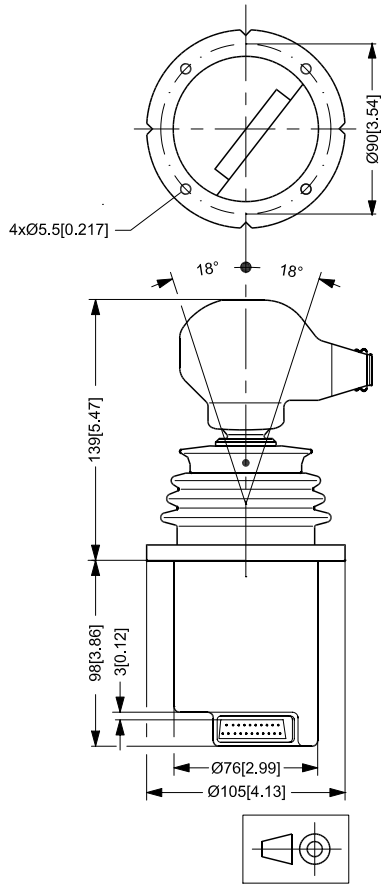

Examples of Use

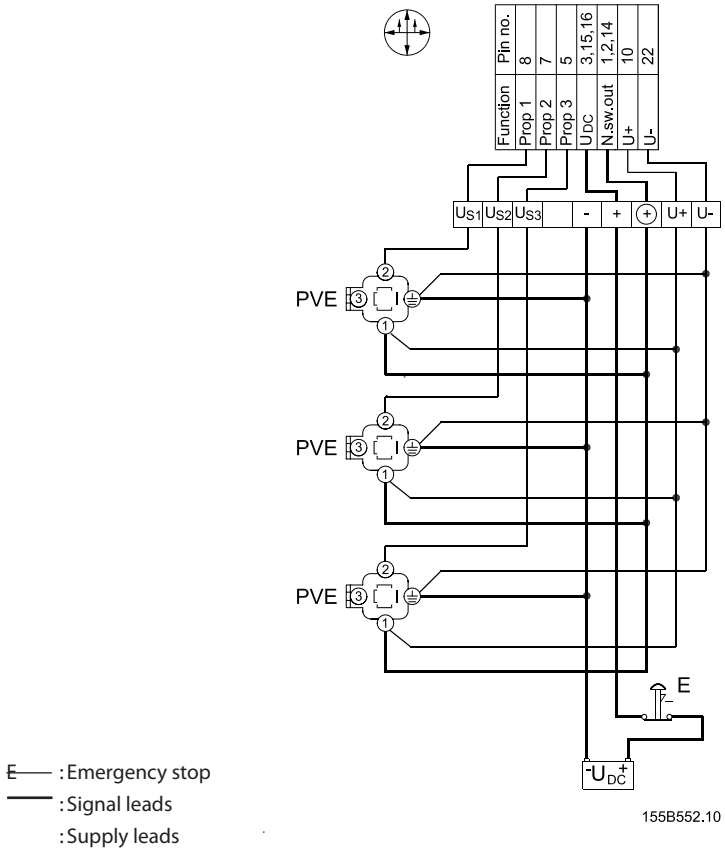

Notes

Notes

Notes

Products we offer:

- Bent Axis Motors
- Closed Circuit Axial Piston Pumps and Motors
- Displays
- Electrohydraulic Power Steering
- Electrohydraulics
- Hydraulic Power Steering
- Integrated Systems
- Joysticks and Control Handles
- Microcontrollers and Software
- Open Circuit Axial Piston Pumps
- Orbital Motors
- PLUS+1™ GUIDE
- Proportional Valves
- Sensors
- Steering
- Transit Mixer Drives

Members of the Sauer-Danfoss Group:

Comatrol
www.comatrol.com

Schwarzmüller-Inverter
www.schwarzmueller-inverter.com

Turolla
www.turollaocg.com

Hydro-Gear
www.hydro-gear.com

Sauer-Danfoss-Daikin
www.sauer-danfoss-daikin.com

520L0541 • Rev AD • Sep 2010

Sauer-Danfoss is a global manufacturer and supplier of high-quality hydraulic and electronic components. We specialize in providing state-of-the-art technology and solutions that excel in the harsh operating conditions of the mobile off-highway market. Building on our extensive applications expertise, we work closely with our customers to ensure exceptional performance for a broad range of off-highway vehicles.

We help OEMs around the world speed up system development, reduce costs and bring vehicles to market faster.
Sauer-Danfoss – Your Strongest Partner in Mobile Hydraulics.

Go to www.sauer-danfoss.com for further product information.

Wherever off-highway vehicles are at work, so is Sauer-Danfoss.

We offer expert worldwide support for our customers, ensuring the best possible solutions for outstanding performance. And with an extensive network of Global Service Partners, we also provide comprehensive global service for all of our components.

Please contact the Sauer-Danfoss representative nearest you.

Local address:

Sauer-Danfoss (US) Company
2800 East 13th Street
Ames, IA 50010, USA
Phone: +1 515 239 6000
Fax: +1 515 239 6618

Sauer-Danfoss ApS
DK-6430 Nordborg, Denmark
Phone: +45 7488 4444
Fax: +45 7488 4400

Sauer-Danfoss GmbH & Co. OHG
Postfach 2460, D-24531 Neumünster
Krokamp 35, D-24539 Neumünster, Germany
Phone: +49 4321 871 0
Fax: +49 4321 871 122

Sauer-Danfoss-Daikin LTD.
Shin-Osaka TERASAKI 3rd Bldg. 6F
1-5-28 Nishimiyahara, Yodogawa-ku
Osaka 532-0004, Japan
Phone: +81 6 6395 6066
Fax: +81 6 6395 8585

www.sauer-danfoss.com